MONOSEM

Enhanced precision

DEALER PARTS BOOK

Model Years: 1997-2020

Edwardsville, KS

913.438.1700

MONOSEMUSA.COM

REVISED 09-2024

TABLE OF CONTENTS

SECTION

1 Row units; NG, NG+, NG+2, NG+3 & NG+4

2 General information, bearings, belts, and hardware

3 Meter box, seed disc, and hoppers

4 Turbofans, hydraulic drives, and gauges

5 Drive wheel blocks

6 Transmissions

7 Microsem and US insecticide systems

8 Dry Fertilizer systems

9 MS Planter information

10 Twin row items

Seed Tubes & Sensors

7079	Blank seed tube only, no hole
7079.1	Seed tube only, with 1/2" hole for standard sensor
7079.2	Seed tube with standard sensor - NO LONGER AVAILABLE
7079.2S	Seed tube with sensitive sensor
7079.3	Blank peanut tube only, hole is covered
7079.3S	Peanut tube with standard sensor
7079.4	Seed tube only, with 23/32" hole for sensitive sensor
	above tubes are one piece molded plastic with round or no holes
D1700270S1	Dickey-John Standard sensor for above tubes
D2440891S1	Dickey-John Sensitive sensor for above tubes
VA598H03	Vansco Sensor (for MPM console)

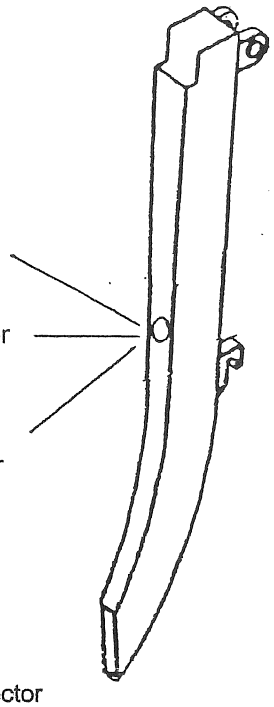

All sensors have 3-pin Weatherpack connections

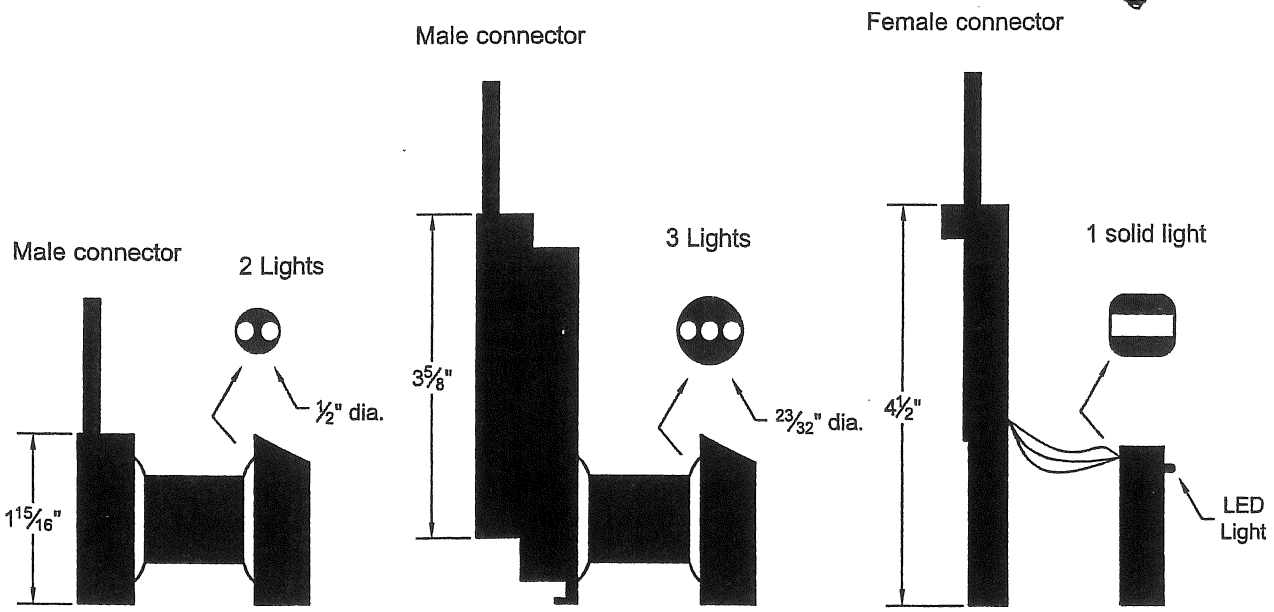

Dickey-John Standard sensor #D1700270S1

Dickey-John Sensitive sensor #D2440891S1

Vansco Sensor #VA598H03

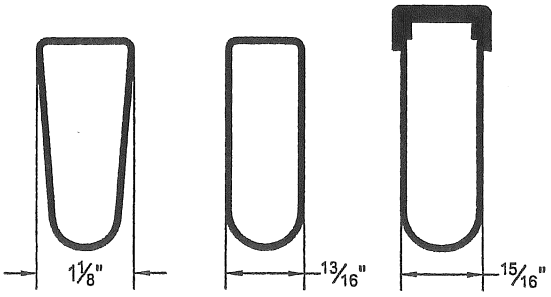

Peanut tube

Standard tube

Vansco tube

NG Row Unit

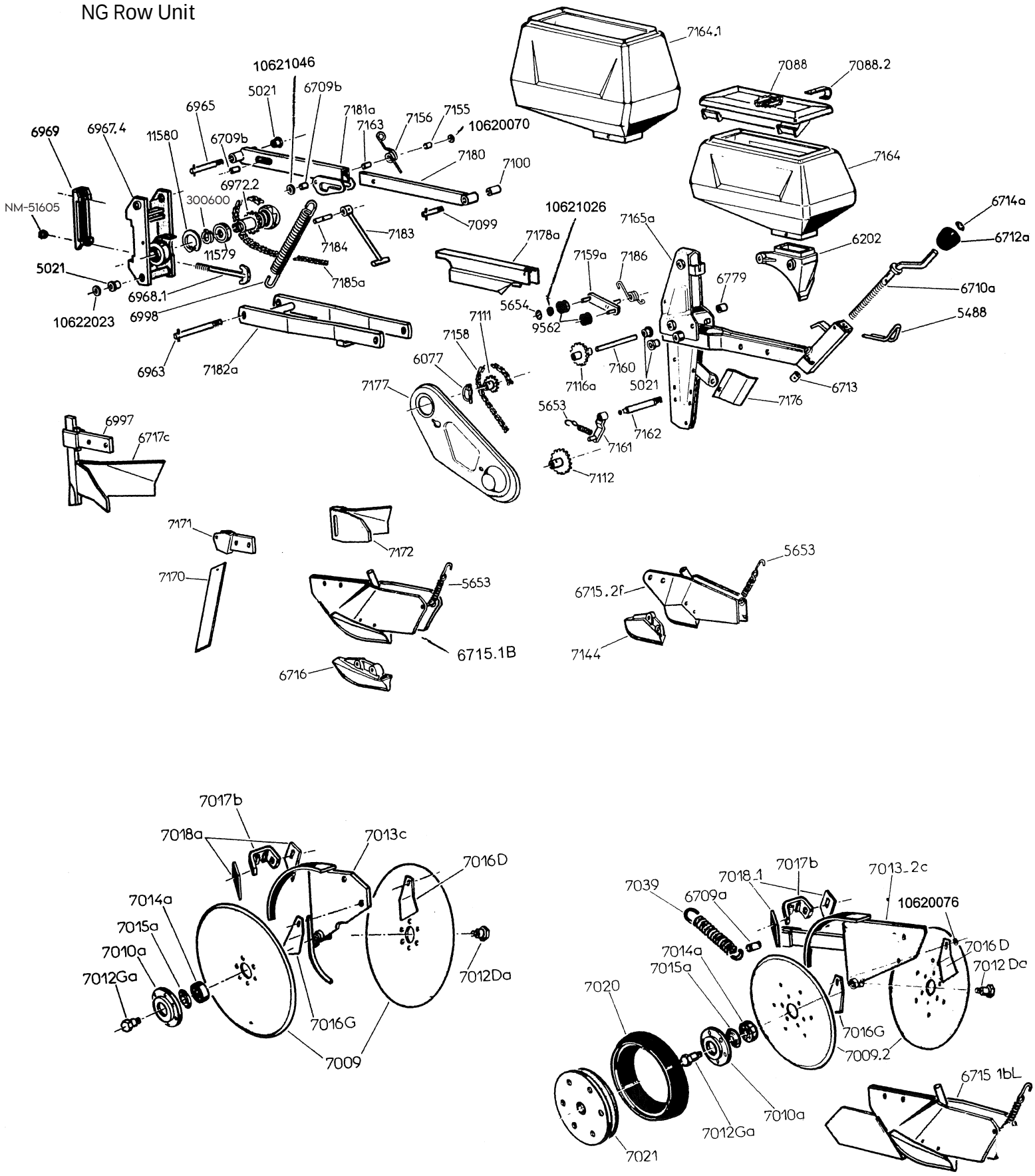
7164.1
7088
7088.2
10621046
5021
6709b
6965
7181a
7156
7155
7163
10620070
6969
6967.4
11580
6709b
7180
7100
7164
6972.2
NM-51605
300600
10621026
6714a
7165a
7183
7184
7099
7178a
6202
6712a
11579
7159a
7186
5021
7185a
6779
6710a
6968.1
5654
6998
10622023
9562
7111
5488
7158
6963
7182a
6077
7160
7116a
5021
6713
7177
7176
5653
6997
6717c
7162
7161
7112
7171
7172
5653
7170
6715.2f
6715.1B
7144
6716
7017b
7018a
7013c
7016D
7014a
7015a
7010a
7012Ga
7012Da
7016G
7009
7039
7018_1
7017b
7013_2c
6709a
10620076
7014a
7016 D
7015a
7012 Da
7020
7016G
7009.2
6715 1bL
7010a
7012Ga
7021

NG row unit

NM-51605	Nylon locknut, 16mm
5021	Bushing (self lubricated)
5488	Depth crank lock
5653	Tension spring
5654	Stop snapring, 12mm
6077	Lynchpin, 6mm
6202	Collar brace
6709.B	Bushing (27mm long x 10ID x 16OD)
6710.A	Threaded crank
6712.A	Knob
6713	Spacer
6714.A	Stop snapring, 16mm
6715.1B	Corn shoe, with large cast point(#6716)
6716	Cast point
10176003	Rivet, 5 x 34mm (for cast point)
6715.2F	Beet shoe, with small cast point(#7144)
7144	Cast point
6717.C	Clod remover with point
6779	Bushing (self lubricated)
300600	Snapring, external 30mm
6963	Pivot pin, lower linkage, front(16mm jam nut)
6965	Pivot pin, upper linkage, front(16mm jam nut)
6967.4	Mounting bracket for 5x5 toolbar
6968.1	T bolt, 16mm
6969	Clamp plate, 5x5 toolbar
6972.2	Slip clutch with 18 tooth sprocket
6997	Mounting bracket for clod remover
6998	Down pressure spring
7088	Lid, red with clip(7088.2)
7088.N	Lid, black with clip(7088.2)
7088.2	Clip only
7099	Pivot pin, upper linkage, rear(16mm jam nut)
7100	Bushing (self lubricated)
7111	Sprocket, 14 tooth, 5R chain(drives the meter box)
7112	Sprocket, 21 tooth, 5R chain(goes on meter box)
7116.A	Sprocket, intermediate drive, 18 tooth, 5R chain
7155	Bushing lift stop
7156	Spring
7158	Side chain, 5R, 70 links w/conn. Link
7159.A	Chain tightener bracket
7160	Shaft, for intermediate sprocket
7161	Chain tightener bracket
7162	Pivot pin, lower linkage, rear(16mm jam nut)
7163	Bushing
7164	Seed hopper, 25 liter(approx. .7 bushels)
7164.1	Seed hopper, 33 liter(approx. .9 bushels)
7165.A	Main frame (since '95)
7170	Independent coulter bar
7171	Mounting bracket for coulter bar
7172	Bolt on clod remover
7176	Protecting shield
7177	Side chain shield
7178.A	Central housing
7180	Upper linkage, male
7181.A	Upper linkage, female(since '95)
7182.A	Lower linkage(since '95)
7183	Lift stop arm
7184	Pin for lift stop arm
7185.A	Unit drive chain, 5R, 88 links w/conn. Link
9562	Chain idler, plastic
11579	Bearing, safety clutch(60062RS ref. #)
11580	Snapring, 55mm

Double disc opener parts

6709.A	Bushing (33mm long x 12ID x 18OD)
6715.1BL	Extended shoe, with large cast poin(#6716) only to be used with double disc opener with side gauge wheel assembly
7009	Disc only, 13-3/4" dia.
7009.1A	Disc complete with hub/bearing
7009.2	Disc only, 13-3/4" dia.(for side gauge wheels)
7010.A	Hub
7012.DA	Removable spindle, righthand
7012.GA	Removable spindle, lefthand
7013.C	Disc mount housing(since '89)
7013.2C	Disc mount housing(since '91)
7014.A	Bearing (52042RS ref. #)
7015.A	Sealing washer
7016.D	Inside scraper, right
7016.G	Inside scraper, left
7017.B	Outside scraper bracket
7018.A	Outside scraper(since '85)
7018.1	Outside scraper
7020	Tire only(side press wheel)
7021	Rim only(side press wheel)
7039	Spring
10620070	Washer, 8.5x20x2
10620076	Washer, 10x20x2
10621026	Washer, 13x18x2
10621046	Washer, 13x27x2
10622023	Washer, 16.5x26x.5

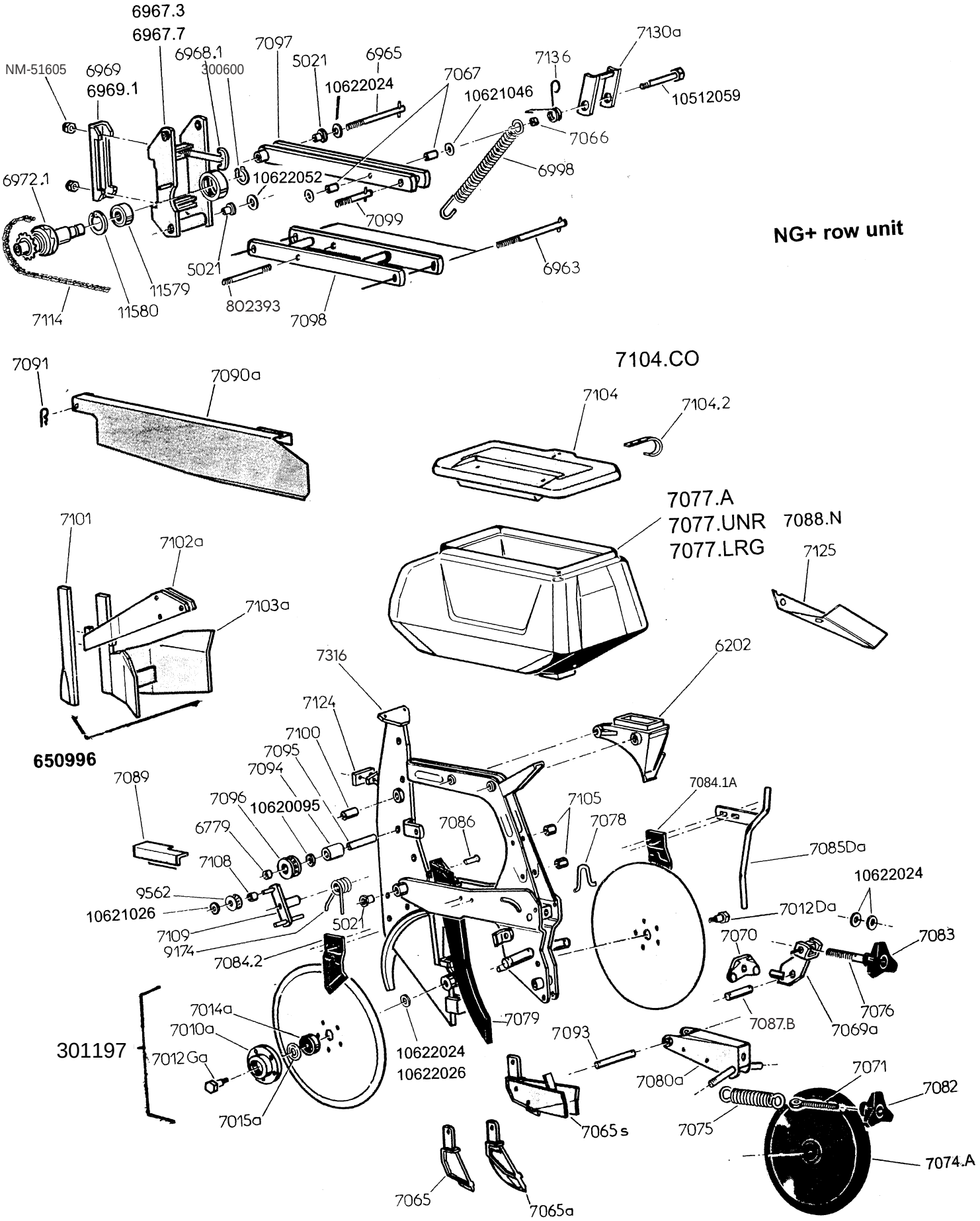
6967.3
6967.7
6968.1
7097
5021
6965
7130a
NM-51605
6969
6969.1
300600
10622024
7067
7136
10621046
10512059
7066
6998
6972.1
10622052
7099
NG+ row unit
5021
6963
11579
802393
7114
11580
7098
7091
7090a
7104.CO
7104
7104.2
7077.A
7077.UNR
7088.N
7077.LRG
7125
7101
7102a
7103a
6202
7316
7124
7100
7095
650996
7094
7089
7084.1A
7096
10620095
7105
7086
7078
6779
7085Da
7108
10622024
9562
7012Da
10621026
5021
7109
7070
7083
9174
7084.2
7014a
7010a
7079
7087.B
7076
7069a
301197
7012Ga
10622024
10622026
7093
7080a
7071
7082
7015a
7065s
7075
7074.A
7065
7065a

NG+ row unit

4502.S	U bolt, for 7x7 toolbar, 5/8"-11
N-5101	5/8-11 Nylon lock nut G8
5021	Bushing (self lubricated)
6202	Collar brace
6779	Bushing (self lubricated, goes into 7096)
300600	Snapring, 30mm
6963	Pivot pin, lower linkage, front and rear(16mm jam nut)
6965	Pivot pin, upper linkage, front(16mm jam nut)
6967.3	Clamp facing, 5x5 toolbar(for use with #6968.1 T bolt)
6967.7	Clamp facing, 7x7 toolbar(for use with #4502.S U bolt)
6968.1	T bolt, 16mm, for 5x5 toolbar
NM-51605	Nylon locknut, 16mm
6969	Clamp plate, 5x5 toolbar
6969.1	Clamp plate, 7x7 toolbar
6972.1	Slipclutch
6998	Spring
7010.A	Cast hub, uses 6x22 rivets
10176004	Rivet, 6x22mm (for above hub)
7012.DA	Removable spindle, righthand
7012.GA	Removable spindle, lefthand
7014.A	Bearing, double disk opener(52042RS)
7015.A	Sealing washer
66005917	Main frame, NG+
7065	Cast point
7065.A	Cast V slice insert
7065.S	V slice insert, for small seed
7066	Bushing
7067	Spacers for unit lockup bracket
7068	Opening disc only
301197	Opening disc complete(bearing mounted on disc) Made in USA by Ingersoll
7069.A	Bracket for wheel stop and depth control rod
7070	Pivoting wheel stop bracket(secure with 6x25 roll pin)
7071	Threaded rod for closing wheel adjustment
7074.A	Adjustable closing wheel complete
7075	Spring, closing wheel
7076	Threaded rod for depth adjustment
7077.A	Seed hopper, 45 liter(approx. 1.25 bu.)
7077.LRG	Seed hopper, 60 liter(approx. 1.7 bu.)
7077.UNR	Seed hopper, 50 liter(approx. 1.4 bu., takes 7088.N lid)
7078	Wire stop for depth control rod
7079	Blank seed tube
7080.A	Bracket, adjustable closing wheels
7082	Handwheel for closing wheel adjustment
7083	Handwheel for depth control adjustment(takes 6x35 roll pin)
7084.1A	Right outside scraper
7084.2A	Left outside scraper
	Above scrapers mount w/2-8x70 bolts & 1-6x100 bolt
7085.DA	Insecticide drop tube, right hand
7085.GA	Insecticide drop tube, left hand
7086	Pin to attach seed tube
7087.B	Pin to mount 7069.a(uses 2 5x40 cotter pins)
7088.N	Lid(not shown, for 7077.UNR hopper)
7089	Small chain guard
7090.A	Drive chain guard
7091	Clip pin
7093	Pivot pin for closing wheel bracket
7094	Spacer bushing
7095	Pivot pin(10x100 bolt goes through this)
7096	Chain roller (cast iron)
7097	Upper parallel linkage arm
7098	Lower parallel linkage arm
7099	Pivot pin, upper linkage, rear(16mm jam nut)
7100	Bushing, self lubricated
7101	Front point, clod remover
7102.A	Mounting bracket, clod remover
7103.A	Clod remover
650996	**Clod remover complete**
7104.CO	Lid complete w/spring clip
7104.2	Spring clip
7105	Spacer
7108	Bushing
7109	Chain tightener bracket
7114	Drive chain, 5R(124 links w/conn. link)
7124	Unit stop
7125	Seed chute
802393	Threaded rod
7130.A	Unit lock up bracket
7136	Spring
9174	Spring, chain tightener
9562	Chain roller (plastic)
11579	Bearing, safety clutch(60062RS)
11580	Snapring, 55mm
10170067	Cotter pin, 5 x 40
10172090	Roll pin, 6 x 25
10172092	Roll pin, 6 x 35
10511007	Bolt, 6 x 100
10511064	Bolt, 8 x 70
10512027	Bolt, 10 x 100
10512059	Bolt, 12 x 120
10620095	Washer, 10.5x27x2
10621026	Washer, 13x18x2
10621046	Washer, 13x27x2
10622024	Washer, 16.5x26x1
10622026	Washer, 16.5x26x2
10622052	Washer, 17x50x1

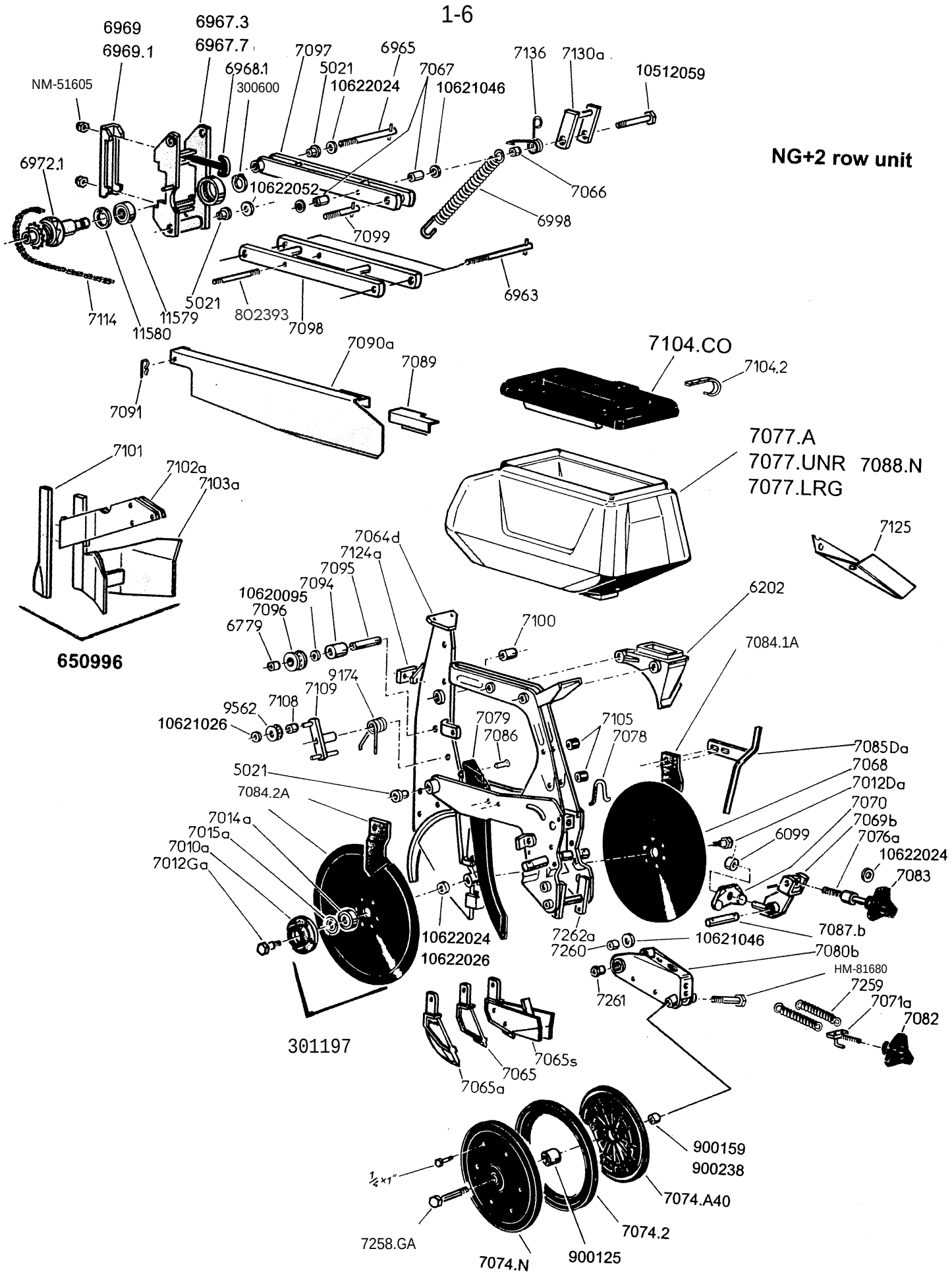
NG+2 row unit
6969
6969.1
6967.3
6967.7
6968.1
300600
NM-51605
7097
5021
10622024
6965
7067
10621046
7136
7130a
10512059
6972.1
10622052
7066
6998
7099
6963
7114
11580
11579
5021
802393
7098
7090a
7089
7091
7104.CO
7104.2
7101
7102a
7103a
650996
7077.A
7077.UNR
7077.LRG
7088.N
7125
7064d
7124a
7095
7094
10620095
7096
6779
6202
7100
7084.1A
9174
7109
9562
7108
10621026
7079
7086
7105
7078
7085Da
5021
7068
7012Da
7084.2A
7070
7014a
7015a
7010a
7012Ga
7069b
6099
7076a
10622024
7083
10622024
10622026
7262a
7260
10621046
7087.b
7080b
HM-81680
7259
7261
7071a
7082
301197
7065s
7065
7065a
900159
900238
1/4×1"
7074.A40
7258.GA
7074.2
7074.N
900125

NG+2 row unit

4502.S	U bolt, for 7x7 toolbar, 5/8"-11
N-5101	5/8-11 NYLON LOCK NUT G8
5021	Bushing (self lubricated)
6099	Collar with pin(6x25 roll pin)
6202	Collar brace
6779	Bushing (self lubricated, goes into 7096)
300600	Snapring, 30mm
6963	Pivot pin, lower linkage, front and rear(16mm jam nut)
6965	Pivot pin, upper linkage, front(16mm jam nut)
6967.3	Clamp facing, 5x5 toolbar(for use with #6968.1 T bolt)
6967.7	Clamp facing, 7x7 toolbar(for use with #4502.S U bolt)
6968.1	T bolt, 16mm, for 5x5 toolbar
NM-51605	Nylon locknut, 16mm
6969	Clamp plate, 5x5 toolbar
6969.1	Clamp plate, 7x7 toolbar
6972.1	Slipclutch
6998	Spring
7010.A	Cast hub, uses 6x22 rivets
10176004	Rivet, 6x22mm (for above hub)
7012.DA	Removable spindle, righthand
7012.GA	Removable spindle, lefthand
7014.A	Bearing, double disk opener(52042RS)
7015.A	Sealing washer
7064.D	Main frame, NG+2
7065	Cast point
7065.A	Cast V slice insert
7065.S	V shoe insert, for small seed
7066	Bushing
7067	Spacers for unit lockup bracket
7068	Opening disc only
301197	Opening disc complete(bearing mounted on disc) Made in USA by Ingersoll
7069.B	Bracket for wheel stop and depth control rod
7070	Pivoting wheel stop bracket
7071.A	Threaded rod for closing wheel adjustment
7074.A40	Rim half
7074.N	Press wheel complete
7074.2	Tire only, 1 x 12"
7076.A	Threaded rod for depth adjustment
7077.A	Seed hopper, 45 liter(approx. 1.25 bu.)
7077.LRG	Seed hopper, 60 liter(approx. 1.7 bu.)
7077.UNR	Seed hopper, 50 liter(approx. 1.4 bu., takes 7088.N lid)
7078	Wire stop for depth control rod
7079	Blank seed tube
7080.B	Bracket, adjustable closing wheels
7082	Handwheel for closing wheel adjustment
7083	Handwheel for depth control adjustment(takes 6X35 roll pin)
7084.1A	Right outside scraper
7084.2A	Left outside scraper
	Above scrapers mount w/2-8x80 bolts & 1-6x100 bolt

7085.DA	Insecticide drop tube, right hand
7085.GA	Insecticide drop tube, left hand
7086	Pin to attach seed tube
7087.B	Pin to mount 7069.b(uses 2 5x40 cotter pins)
7088.N	Lid(not shown, for 7077.UNR hopper)
7089	Small chain guard
7090.A	Drive chain guard
7091	Clip pin
7094	Spacer bushing
7095	Pivot pin(10x100 bolt goes through this)
7096	Chain roller (cast iron)
7097	Upper parallel linkage arm
7098	Lower parallel linkage arm
7099	Pivot pin, upper linkage, rear(16mm jam nut)
7100	Bushing, self lubricated
7101	Front point, clod remover
7102.A	Mounting bracket, clod remover
7103.A	Clod remover
650996	**Clod remover complete**
7104.CO	Lid complete w/spring clip
7104.2	Spring clip
7105	Spacer
7108	Bushing
7109	Chain tightener bracket
7114	Drive chain, 5R(124 links w/conn. link)
7124.A	Unit stop
7125	Seed chute
802393	Threaded rod
7130.A	Unit lock up bracket
7136	Spring
7259	Spring, closing wheel
7260	Spacer bushing
7261	Threaded pivot bushing
7262.A	Spring support bracket
9174	Spring, chain tightener
9562	Chain roller (plastic)
11579	Bearing, safety clutch(60062RS)
11580	Snapring, 55mm
900125	Bearing, 40mm
900159	Bushing spacer, standard, 7/16" wide
900238	Bushing spacer, narrow, 5/16" wide
7258.GA	Bolt, 16 x 80 RH
HM-81680	Bolt, 16 x 80 LH
10170067	Cotter pin, 5 x 40
10172090	Roll pin, 6 x 25
10172092	Roll pin, 6 x 35
10512027	Bolt, 10 x 100
10512059	Bolt, 12 x 120
10620095	Washer, 10.5x27x2
10621026	Washer, 13x18x2
10621046	Washer, 13x27x2
10622024	Washer, 16.5x26x1
10622026	Washer, 16.5x26x2
10622052	Washer, 17x50x1

GAUGE WHEELS
NG+ Units

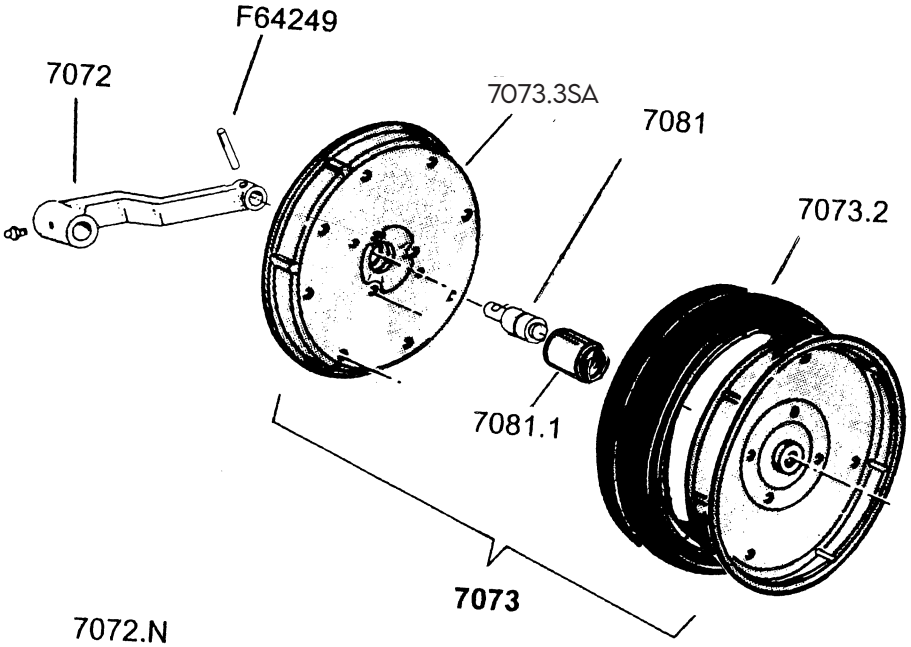

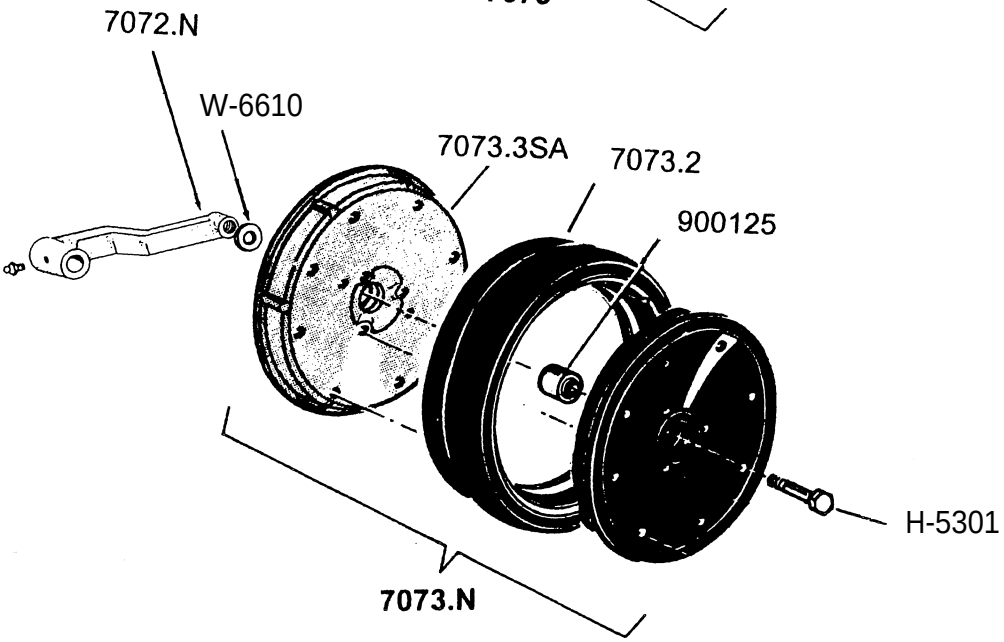

NG+ Units

7072	Arm, black cast iron, requires 1/4"x 1-1/4" roll pin
F64249	Roll pin, 1/4"x1-1/4"
7073	**Complete gauge wheel(cream colored steel rims)**
7073.3SA	Rim half
7073.2	Tire only
7081	Bearing only (has cross drilled 1/4" hole)
7081.1	Sleeve for bearing
7072.N	Arm, black cast iron, requires 5/8"x3" bolt
H-5301	Bolt, 5/8"-11 x 3"
7073.2	Tire only
7073.3SA	Inner rim(steel, black)
7073.N	**Complete gauge wheel(black nylon rim)**
900125	Bearing, 40mm(DAC1640442RSL)
W-6610	Lockwasher, 3/4"

GAUGE WHEELS
NG+2 Units

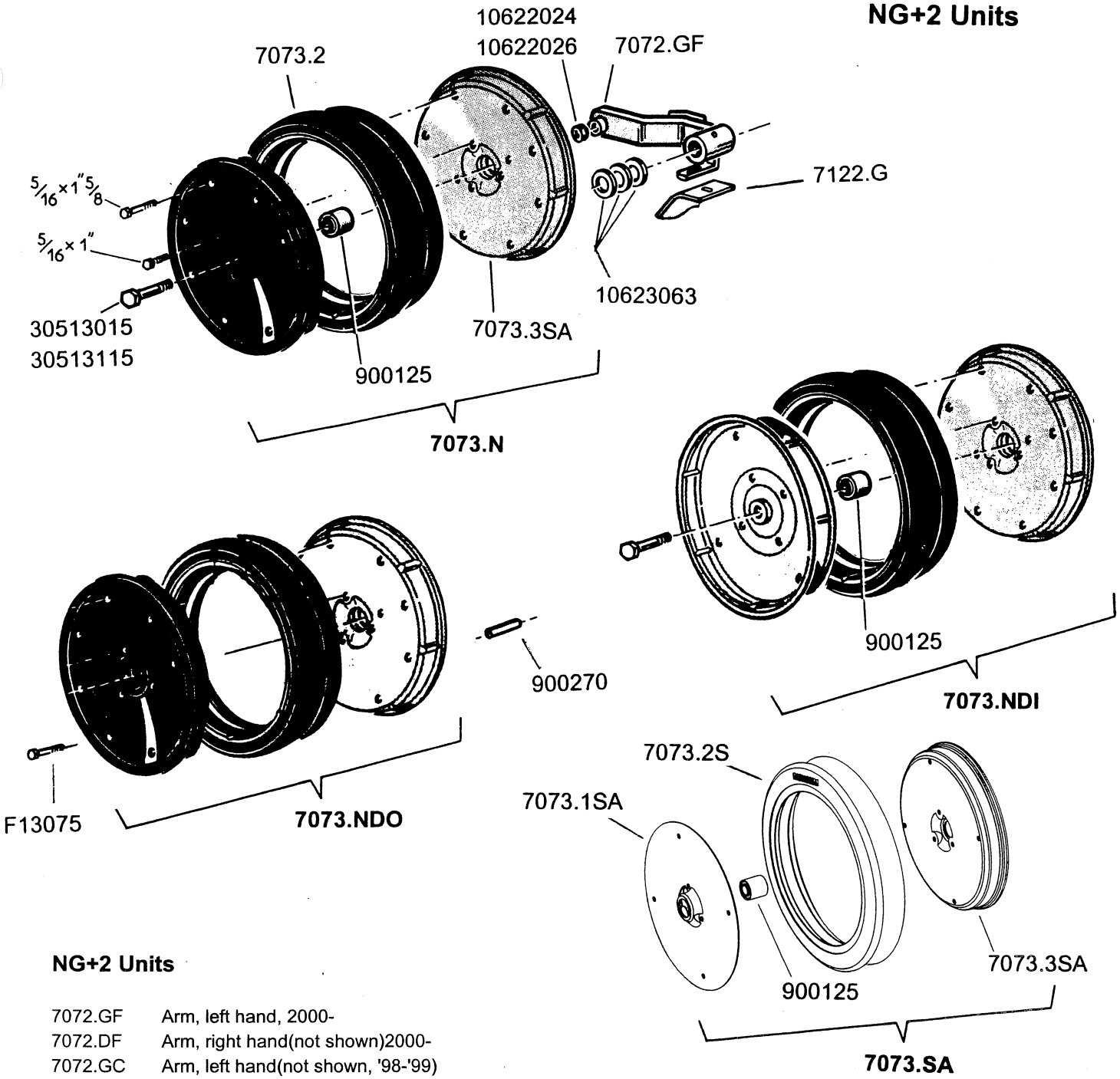

NG+2 Units

7072.GF	Arm, left hand, 2000-
7072.DF	Arm, right hand(not shown)2000-
7072.GC	Arm, left hand(not shown, '98-'99)
7072.DC	Arm, right hand(not shown, '98-'99)
7073.2	Tire only
7073.N	**Complete gauge wheel(black nylon rim)**
7073.3SA	Inner rim(steel, black)
7122.G	Scraper blade, left hand
7122.D	Scraper blade, right hand(not shown)
900125	Bearing, 40mm(DAC1640442RSL)
10622024	Washer, 16.5x26x1
10622026	Washer, 16.5x26x2
10623063	Washer, 26x41x2
30513015	Bolt, right hand, 16x80(goes on 7072.DF)
30513115	Bolt, left hand, 16x80(goes on 7072.GF)

7073.SA	**Narrow gauge wheel complete**
7073.1SA	Outer rim(steel)
7073.2S	Tire only, narrow
7073.3SA	Inner rim(steel, black)
900125	Bearing, 40mm(DAC1640442RSL)
7073.NDI	Dual gauge wheel,inside(two black steel rims with 900125 bearing)
7073.NDO	Dual gauge wheel, outside(one steel rim, one nylon rim, NO bearing)
F13075	Bolt, 5/16" x 6"
900270	Spacer, 4" long

NG+2 Unit gauge wheel arm identification

For NG+3 Units, see page 1-19

Lower area on unit main frame

Lower area on unit main frame

7072.GC

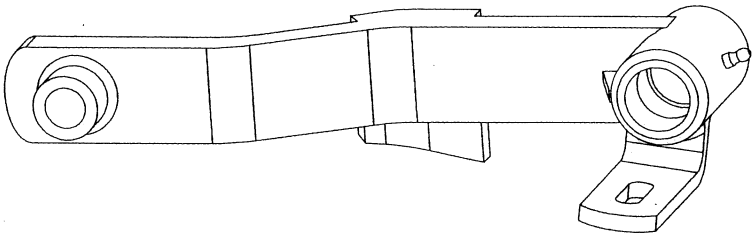

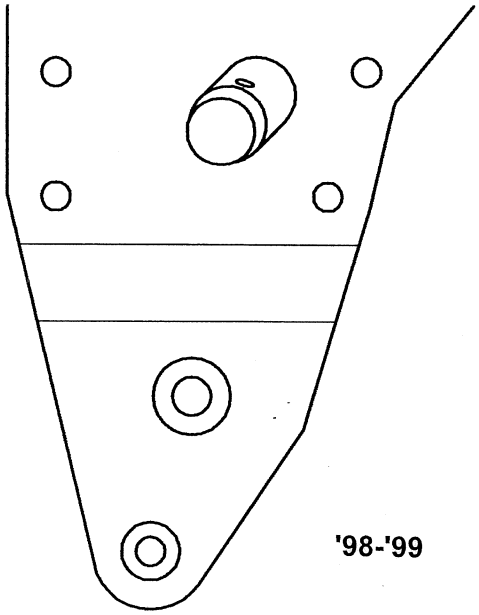

'98-'99

7072.GC and 7072.DC have a longer more pointed "stop block" on the arm. It will rest against the lower main frame.

7072.GF

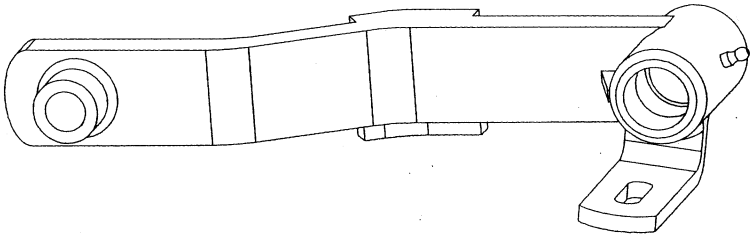

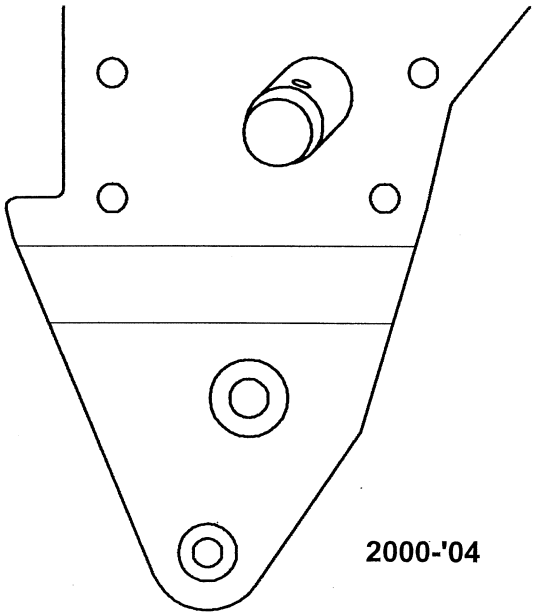

2000-'04

7072.GF and 7072.DF have a rectangular "stop block" on the arm. It will rest on the shelf on the lower main frame.

Adjustable closing wheel w/#6221 bearing on NG+.
Hole in rim is 42mm or 1-21/32" dia..
Rim half is #7074.1A.

6221	Bearing, two required per wheel
7071	Adjustment rod, 12 x 105mm
7074.A	Adjustable closing wheel **complete**
7074.1A	Rim half
7074.2	Tire only, 1 x 12
7074.3	Spindle
7075	Spring
7080.A	Bracket
7082	Hand wheel knob
7093	Pivot pin for bracket
10170093	Cotter pin, 6 x 40mm

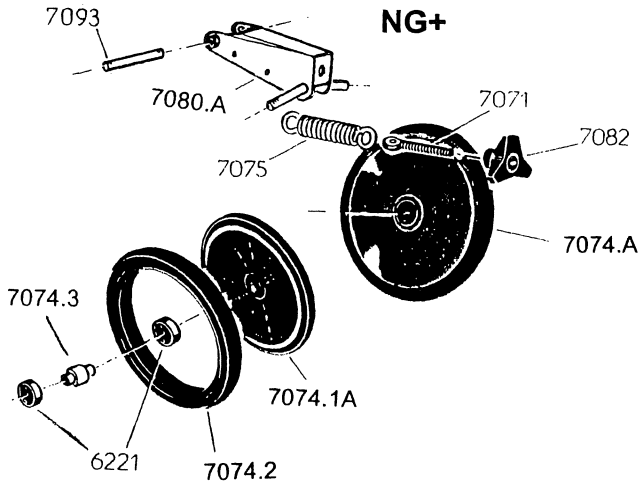

Fixed closing wheel w/#7081 bearing on NG+.
Hole in rim is 30mm or 1-3/16" dia..
Rim half is #7074.1.

7071	Adjustment rod, 12 x 105mm
7074	Fixed closing wheel **complete**
7074.1	Rim half
7074.2	Tire only, 1 x 12
7075	Spring
7080.S	Bracket
7081	Bearing w/cross drilled hole in shaft
7082	Hand wheel knob
7093	Pivot pin for bracket
10170093	Cotter pin, 6 x 40mm

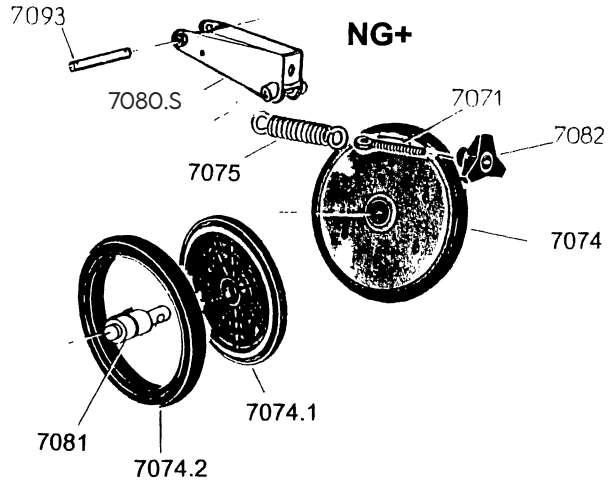

Adjustable closing wheel w/#900125 bearing on NG+ & NG+2.
Hole in rim is 40mm or 1-9/16" dia..
Rim half is #7074.A40

7071.A	Adjustment rod, 12mm
7074.A40	Rim half
7074.2	Tire only, 1 x 12
7074.N	Adjustable closing wheel **complete**
7080.B	Bracket (for NG+2, standard)
7080.E	Bracket (for NG+2, narrow or twin rows)
7080.S	Bracket (for NG+)
7082	Hand wheel knob
7259	Spring
7260	Spacer bushing
7261	Threaded pivot bushing
E9051	Eccentric threaded pivot bushing
HM-61245	Bolt, 12 x 45mm
NM-31203	Jam nut, 12mm
900125	Bearing, 40mm
900159	Bushing spacer, standard, 7/16" wide
900238	Bushing spacer, narrow, 5/16" wide
30513015	Bolt, 16 x 80, RH
30513115	Bolt, 16 x 80, LH

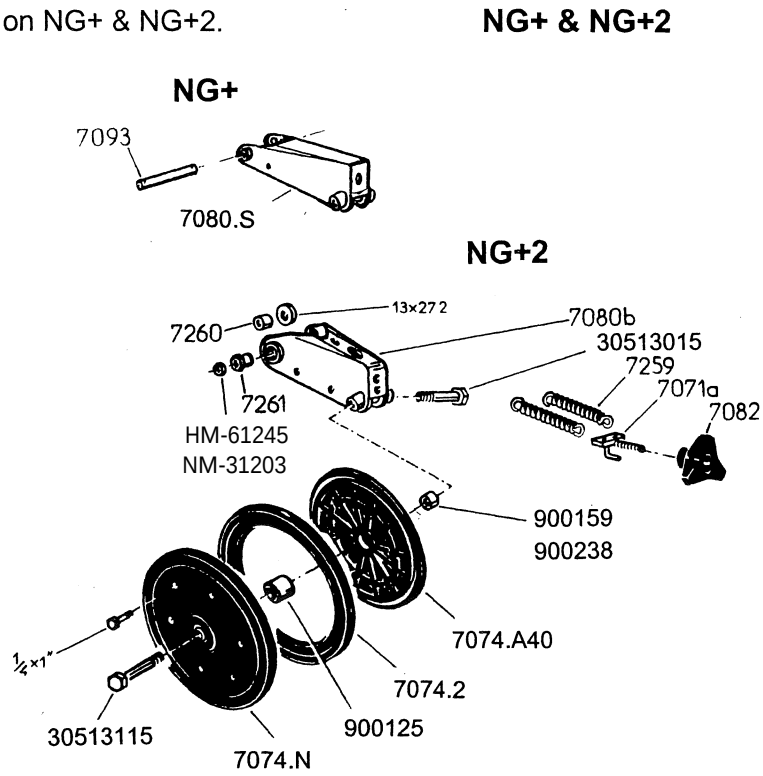

Disc closing system with flat press wheel for NG+

100276	**Complete assembly as shown**
5513	Down pressure spring
7071	Adjustment rod, 12 x 110mm
7075	Spring
7082	Handwheel knob
7207.2	Frame
7208	Frame pivot shaft
7209	Sleeve for spring
7210	Bracket for mounting discs
7211	Wheel frame stop
7224	Shaft for rear press wheel w/12mm nuts
7225	Bushing spacer, 62mm long
11210	Cap to support spring
900083	Flat press wheel complete
900083.2	Tire only (6-1/2" x 12")
900092	Bearing (203503, discontinued)
KA6897	Disc complete w/hub & bearing replaced by #900262
KA2014	Bearing (83B607A)
KD10473	Hub only
301480	Disc only
K10427	Rivet, 1/4" x 1/2"
KD11845	Plastic cap for hub
10621046	Washer, 13x27x2
10622026	Washer, 16.5x26x2
W-5410	Flat washer, 5/8" SAE
H-5201	Bolt, 5/8 x 2"
N-5101	Nylon locknut, 5/8"

NOTE: Discs with cast iron hubs have been discontinued. Order complete disc KA6897 or 900262

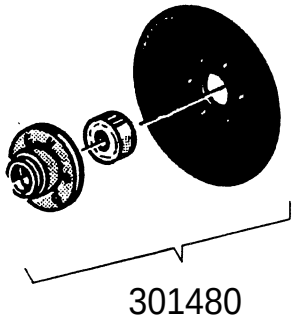

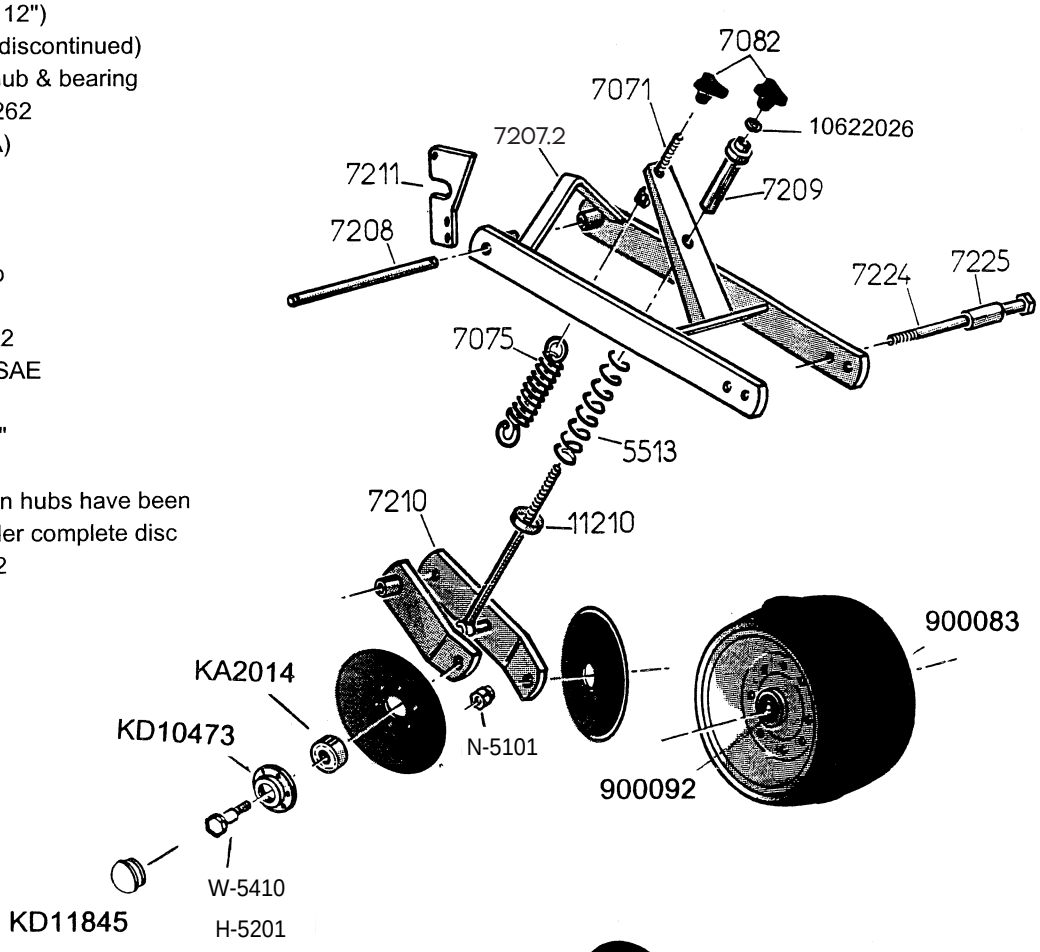

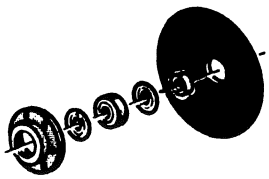

Old style disc with cast iron hub

Disc closing system with flat press wheel, NG+2

100276	**Complete assembly as shown**
5513	Down pressure spring
7028	Bushing, 59mm long
300605	Adjustment rod, 12 x 130mm
7075	Spring
7082	Handwheel knob
7207.2	Frame
7209	Sleeve for spring
7210.a	Bracket for mounting discs
7211.a	Wheel frame stop
11210	Cap to support spring
900083.A	Flat press wheel complete
900083.1	Rim half
900083.2	Tire only (6-1/2" x 12")
900125	Bearing, 40mm
900252	Bushing spacer, 2-13/16" long
301480	Disc complete w/hub & bearing
KA2014	Bearing (83B607A)
KD10473	Hub only

K10427	Rivet, 1/4" x 1/2"
KD11845	Plastic cap for hub
W-5410	Flat washer, 5/8" SAE
HM-81645	Bolt, 16 x 45mm
NM-51603	Jam nut, 16mm
HM-61290	Bolt, 12 x 90mm
NM-31205	Nylon locknut, 12mm
10621046	Washer, 13x27x2
10621055	Washer, 13x30x5
10622026	Washer, 16.5x26x2
H-5901	Bolt, 5/8 x 9"
N-5201	Locknut, 5/8"

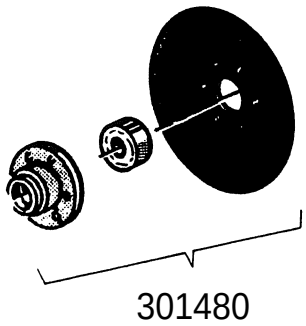

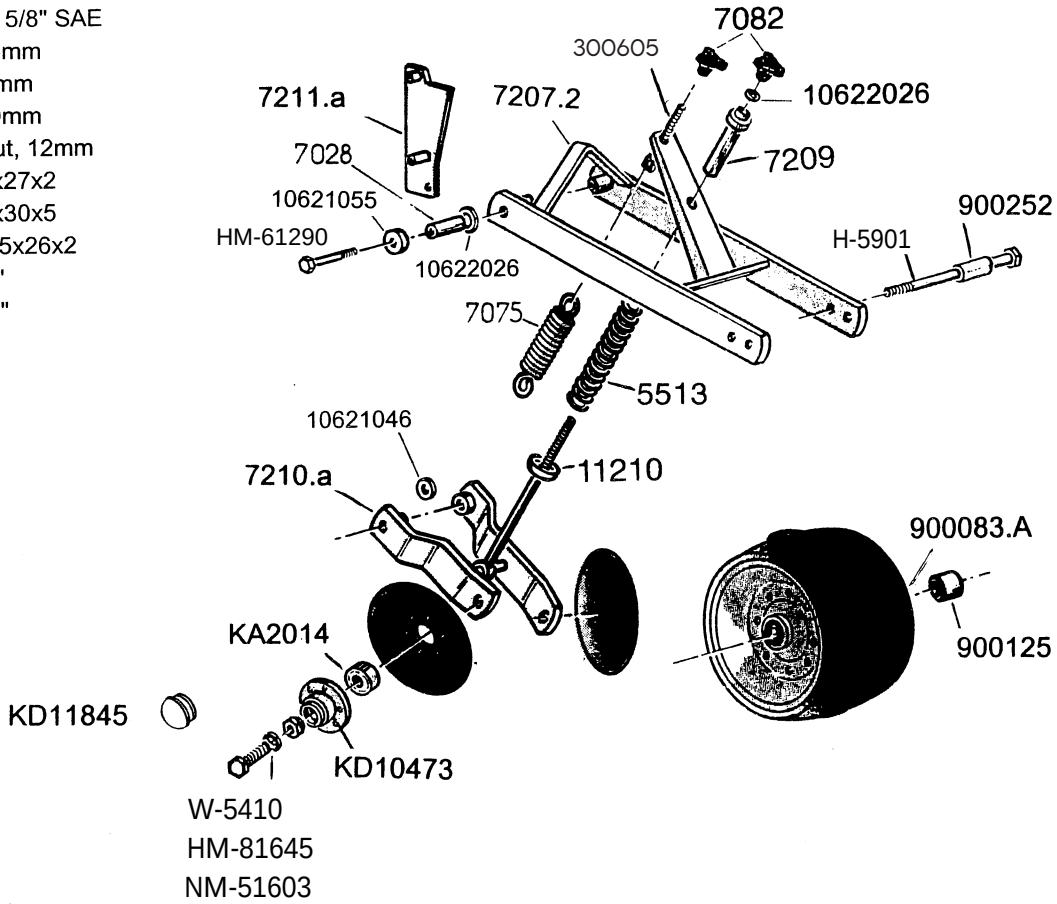

Disc closing system with V press wheels for NG+

5513	Down pressure spring
6621	Bearing, two per wheel(60042RS)
7071	Adjustment rod, 12 x 110mm
7074.A	Adjustable closing wheel **complete**
7074.1A	Rim half
7074.2	Tire only, 1 x 12
7074.3	Spindle
7075	Spring
7082	Handwheel knob
7207.1	Frame
7208	Frame pivot shaft
7209	Sleeve for spring
7210	Bracket for mounting discs
7211	Wheel frame stop
11210	Cap to support spring
301480	Disc complete w/hub & bearing
KA2014	Bearing (83B607A)
KD10473	Hub only
K10427	Rivet, 1/4" x 1/2"
KD11845	Plastic cap for hub
10622026	Washer, 16.5x26x2
W-5410	Flat washer, 5/8" SAE
H-5201	Bolt, 5/8 x 2"
N-5101	Nylon locknut, 5/8"

NOTE: Discs with cast iron hubs have been discontinued. Order complete disc 301480

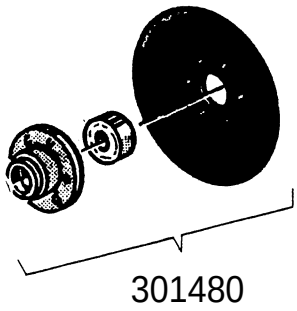

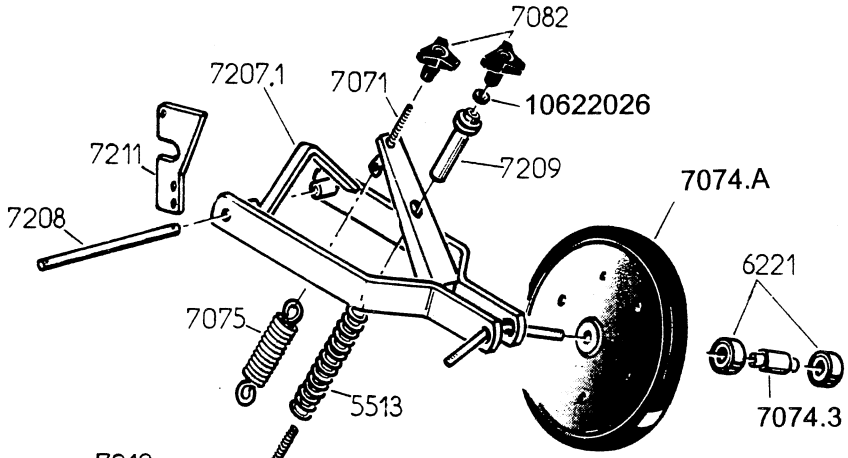

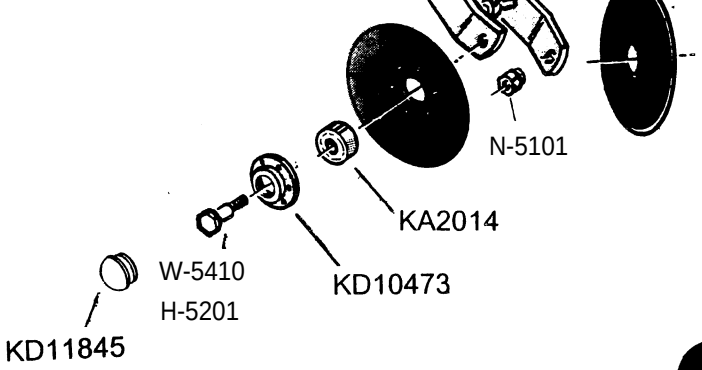

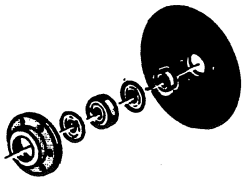

Old style disc with cast iron hub

Disc closing system with V press wheels for NG+2

5513	Down pressure spring
7028	Bushing, 59mm long
300605	Adjustment rod, 12 x 130mm
7074.N	Adjustable closing wheel **complete**
7074.A40	Rim half
7074.2	Tire only, 1 x 12
7075	Spring
7082	Handwheel knob
7207.1A	Frame
7209	Sleeve for spring
7210.a	Bracket for mounting discs
7211.a	Wheel frame stop
11210	Cap to support spring
900125	Bearing, 40mm
301480	Disc complete w/hub & bearing
KA2014	Bearing (83B607A)
KD10473	Hub only
K10427	Rivet, 1/4" x 1/2"
KD11845	Plastic cap for hub
W-5410	Flat washer, 5/8" SAE
HM-81645	Bolt, 16 x 45mm
NM-51603	Jam nut, 16mm
HM-61290	Bolt, 12 x 90mm
NM-31205	Nylon locknut, 12mm
10621046	Washer, 13x27x2
10621055	Washer, 13x30x5
10622026	Washer, 16.5x26x2
900159	Bushing spacer, standard, 7/16" wide
900238	Bushing spacer, narrow, 5/16" wide
30513015	Bolt, 16x80, RH
30513115	Bolt, 16x80, LH
100337	Hiller Disc, w/V-Press Wheel Complete Assembly

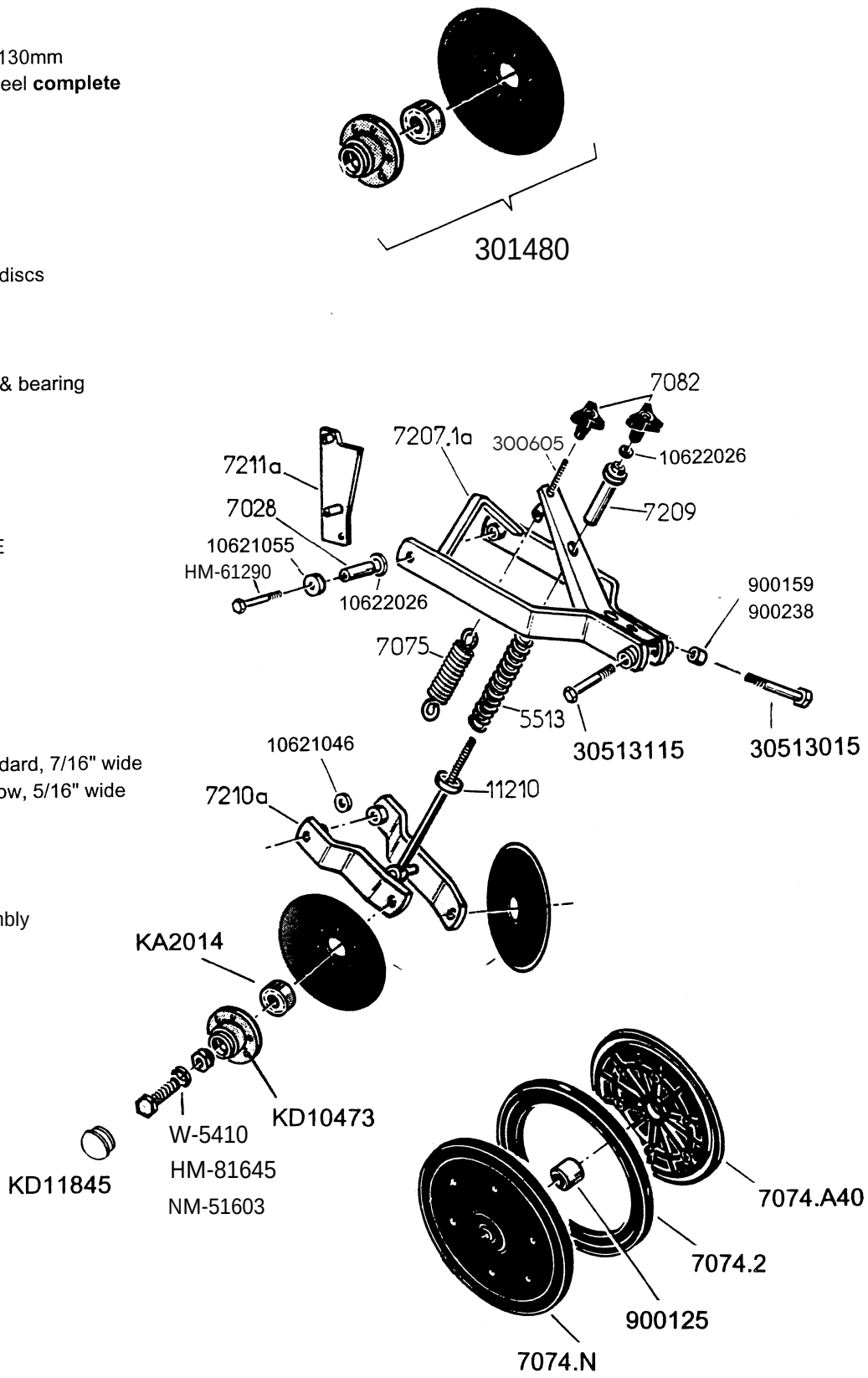

UP/DOWN PRESSURE SPRING KIT PART #'S

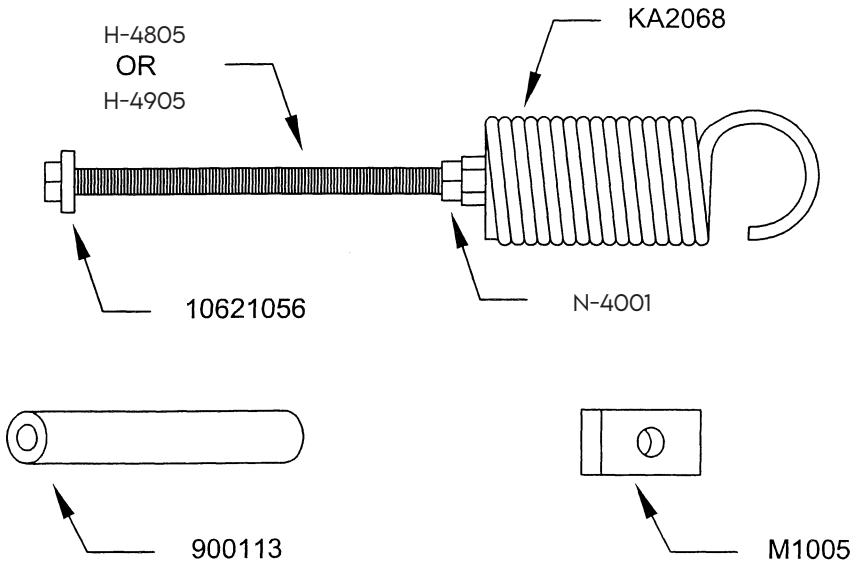

Down Pressure Spring Kit
KA2068.ASY

KA2068	Spring
10621056	Washer, 13x30x6
H-4805	Bolt, all thread, 1/2-13 x 8"
N-4001	Nut, 1/2-13
900113	Spacer bushing
M1005	Upper linkage tab(if needed)

Up Pressure Spring Kit
KA2068.ASYU

KA2068	Spring
10621056	Washer, 13x30x6
H-4905	Bolt, all thread, 1/2-13 x 10"
N-4001	Nut, 1/2-13
M1005	Upper linkage tab(if needed)

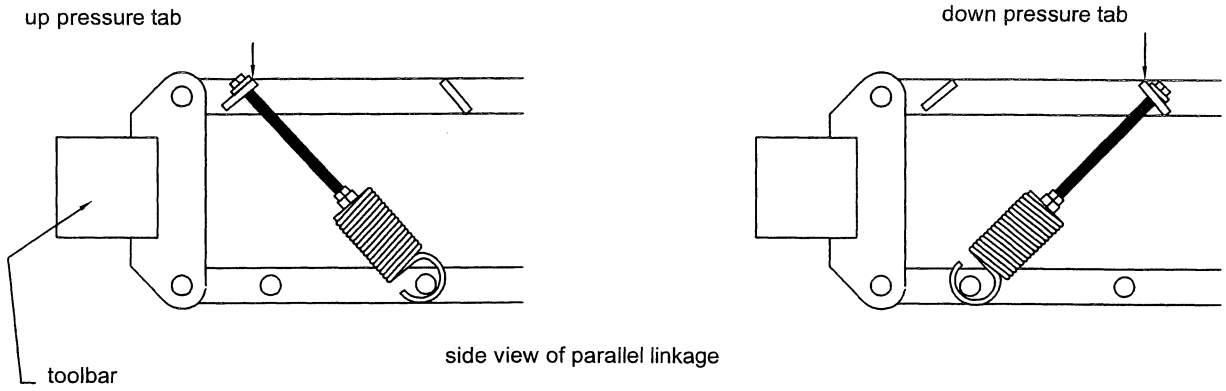

Yetter Universal Spring Kit

used prior to 2003

Y2960-126	Spring kit complete
Y2960-220	Spring bar
Y2960-353	Spacer, 7/8"
Y2960-373	Spring
Y2960-352	Spacer, 1-29/32"
F65417	Cotter pin, 1/4 x 1-3/4"
Y2960-351	Spacer, 1-5/16"
F65973	Roll pin, 1/4 x 2"
Y2960-359	Spring adjustment pin
Y2570-448	Hairpin, 1/8"
Y2960-221	Front bar
Y2960-361	Spring anchor, left hand
Y2960-360	Spring anchor, right hand
Y2960-354	Bushing, 5/8" ID x 1-1/16" OD x 9/16"
H-5250	Bolt, 5/8-11 x 2-1/2", Gr. 5
W-5210	Flatwasher, 5/8"
N-5201	Lock nut, 5/8-11
H-4201	Bolt, 1/2-13 x 2", Gr. 5
N-4301	Lock nut, 1/2-13
Y2960-372	Spring stop

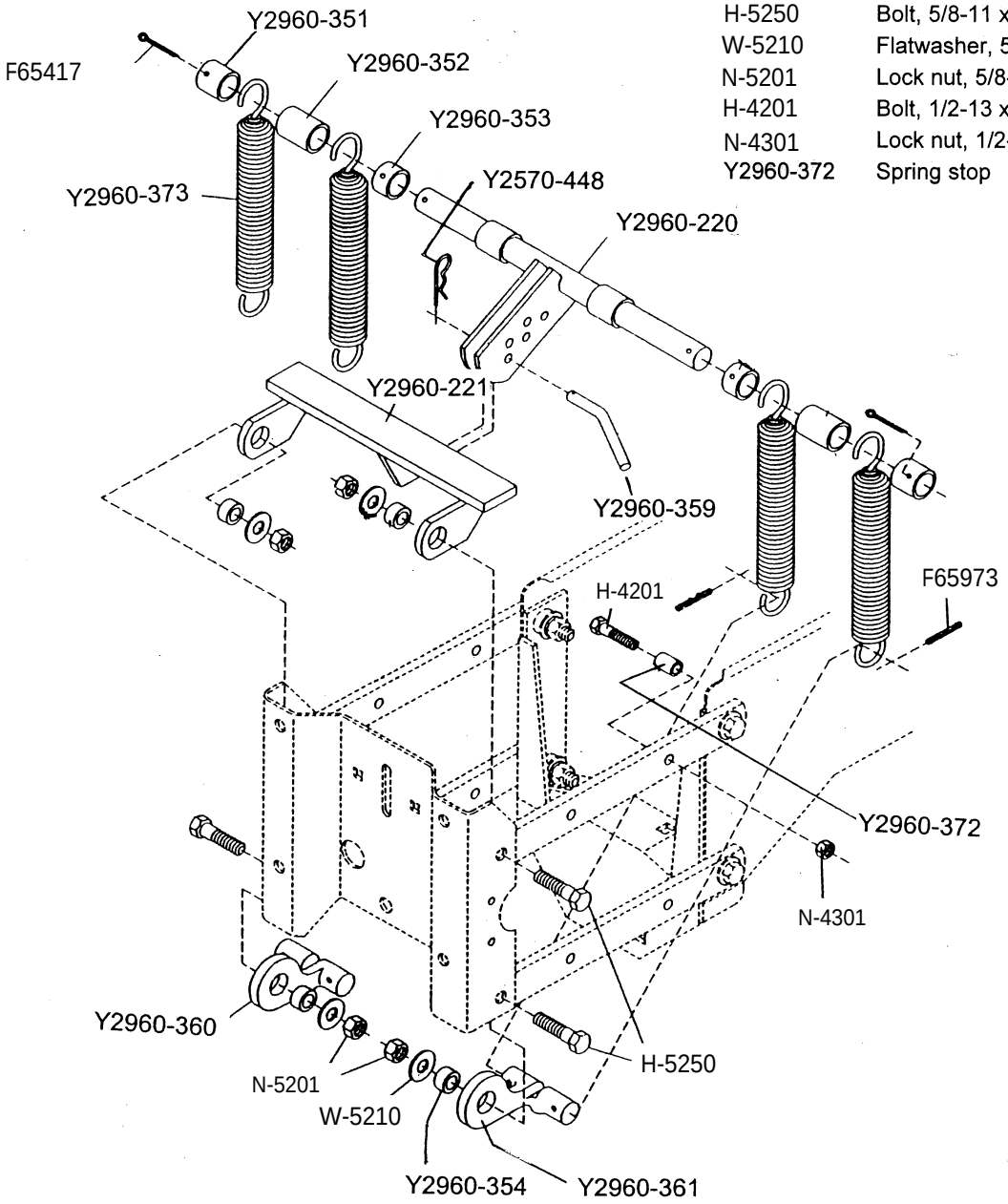

HEAVY DUTY NO TILL LINKAGE 1-18

7x7 Toolbar only

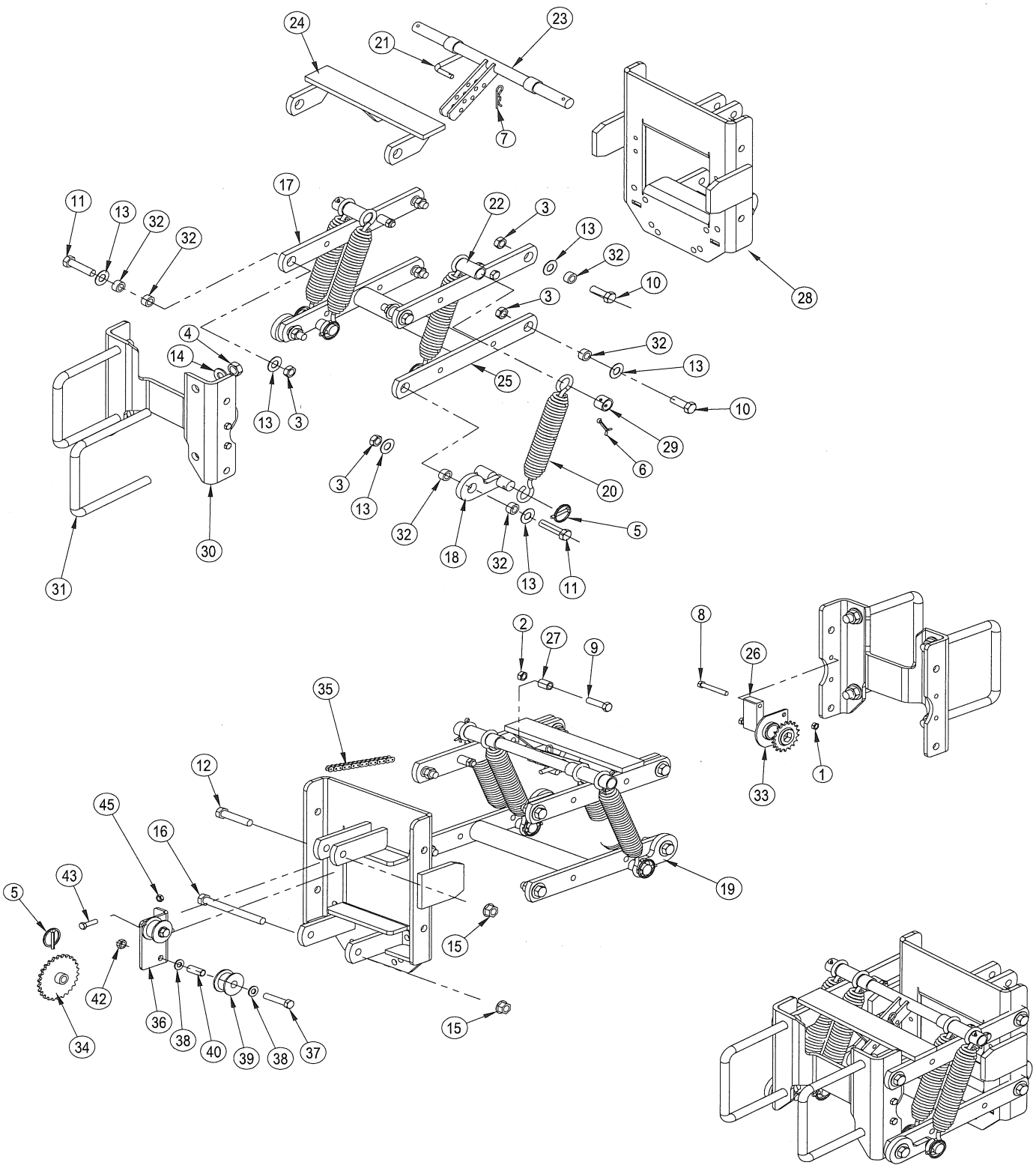

HEAVY DUTY NO TILL LINKAGE

	PART No.	DESCRIPTION
1	N-2101	3/8-16 Nylock nut Gr 5
2	N-4101	1/2-13 Nylock nut Gr 8
3	N-5101	5/8-11 Nylock nut Gr 8
4	N-6101	3/4-10 Nylock nut Gr 8
5	6077	Lynch pin, 1/4 x 1 1/4
6	F65147	Cotter pin, 1/4 x 2
7	7091	Hairpin, 1/8
8	H-3230	Hex bolt, 3/8-16 x 2 3/4 Gr 8
9	H-4220	Hex bolt, 1/2-13 x 2-1/2 Gr 8
10	H-5201	Hex bolt, 5/8-11 x 2 Gr 8
11	H-5301	Hex bolt, 5/8-11 x 3 Gr 8
12	H-5301	Hex bolt, 5/8-11 x 3 Gr 8
13	W-5210	Flat washer 5/8 Gr 8
14	W-6210	Flat washer 3/4 Gr 8
15	N-5401	Nut, flange head 5/8-11
16	H-5651	Hex bolt, 5/8-11 x 6 1/2 Gr 8
17	803557	Upper Parallel arm
18	L124591	Spring anchor LH
19	L124592	Spring anchor RH
20	L124630	Spring w/swivel hooks
21	L124643	Pin, spring adjustment
22	L124645	Spacer
23	907067	Spring bar
24	907130	Front bar
25	907098	Lower parallel arm
26	906972	Spacer block for sprocket
27	L124709	Spacer bushing
28	907064	Baseplate for unit mount
29	L125007	Bushing with hole for cotter pin
30	906967	Mounting plate, to toolbar
31	4502.SA	U-bolt, 7 x 7 x 3/4
32	L71505214	Bushing 5/8" ID x 1" OD x 37/64" wide
33	KA1720	Bearing sprocket
34	7110.S	Sprocket, 27 tooth #41 chain
35	900259	Chain, #41 x 124 links
36	800310	Roller bracket
37	H-4220	Hex bolt, 1/2-13 x 2 1/2 Gr 8
38	W-4410	Flat washer, 1/2
39	300592	Chain roller
40	E7523.1	Bushing, 13 ID x 16 OD x 38mm
42	N-4301	Reversible lock nut, 1/2-13
43	H-3104	Hex bolt, 3/8-16 x 1 1/4
45	N-2101	3/8-16 Nylock nut Gr 8
	100015	Linkage and spring kit (less sprocket, chain and rollers)
	100300	Idler assembly (items 36 - 45)

Residue Manager Assembly

Y2967-109	Residue manager assembly **complete** with mounting bracket(Y2967-245)
Y2967-016	Residue manager assembly less mounting bracket
Y2965-352	Hub cap
Y2967-404	Spoke wheel, 13" dia.
Y2570-742	D bolt, 5/8-11 x 4" Gr. 5
Y2527-530	Bushing, 3/16" thick machine bushing
Y2965-128	Hub and bearing assembly
Y2570-594	Bearing (6006RK)
Y2570-715	Insert for bearing
Y2965-127	Bearing and insert assembly
Y2965-351	Hub
Y2550-052	Seal for hub & bearing
Y2967-302	Spacer, 3/4"
Y2967-336	Bearing shield
W-5610	Lockwasher, 5/8
N-5001	Nut, 5/8-11
CB-1150	Carriage bolt, 5/16-18 x 1-1/2" Gr. 5
N-1300	Rev lock nut, 5/16-18
Y2967-200	Stem
Y2967-245	Mounting bracket only
Y2965-305	Pin
Y2570-448	Hairpin, 1/8"
H-3130	Bolt, 3/8-16 x 1-3/4" Gr. 5
W-2610	Lockwasher, 3/8
N-2001	Nut, 3/8-16
Y2967-211	Mounting bracket for No-till parallel linkage
H-4120	Bolt, 1/2-13 x 1-1/2" Gr. 5
W-4210	Flat washer, 1/2
N-4301	Rev lock nut, 1/2-13
H-4320	Bolt, 1/2-13 x 3-1/2" Gr. 5
Y2526-402	Machine bushing, 9/16 ID x 1-3/4 OD x 1/4" thick

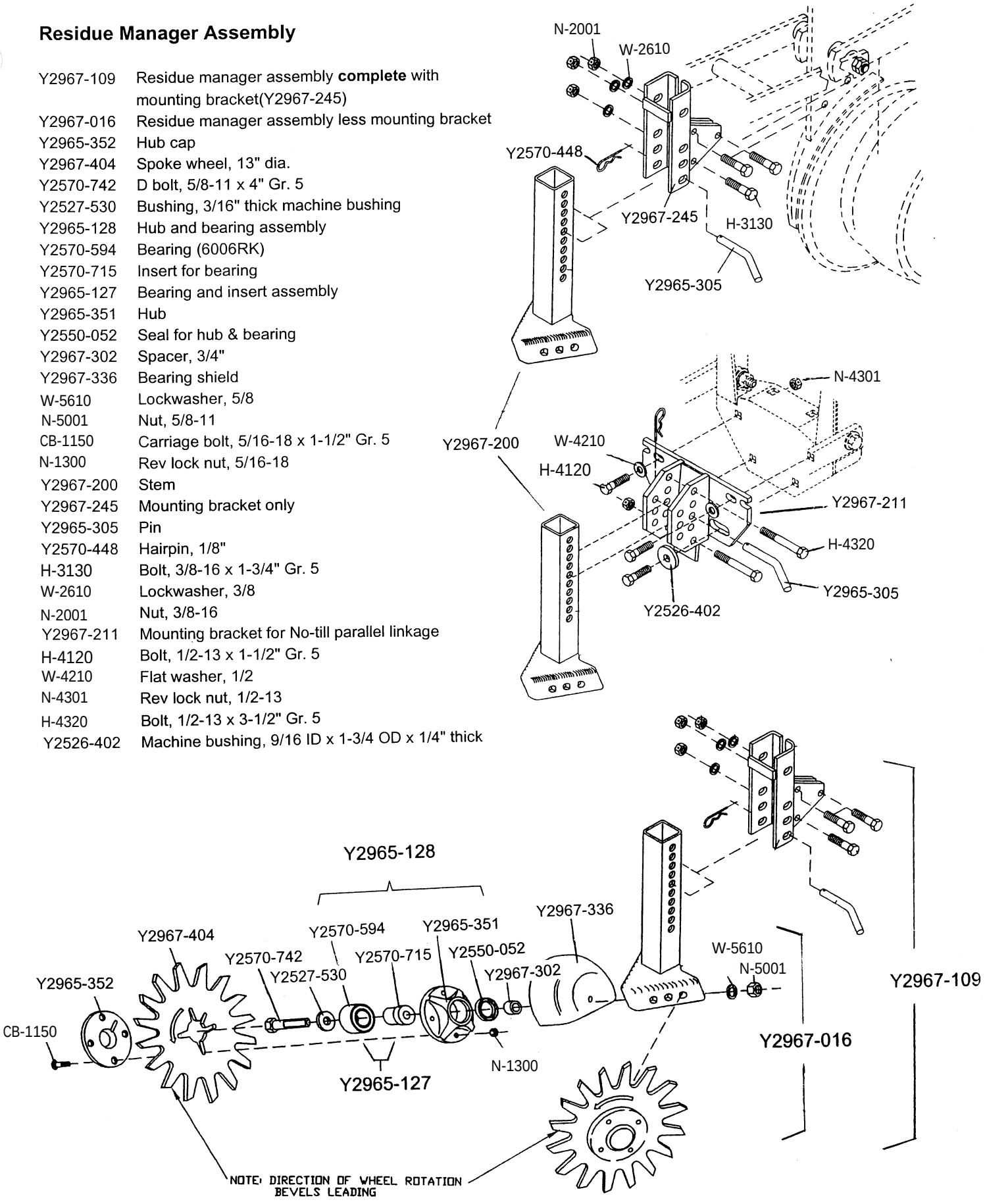

Universal Unit Mounted Coulter

Y2960-127SW Universal unit mounted coulter kit complete

Y2960-219	Universal unit mounting bracket
H-4120	Bolt, 1/2-13 x 1-1/2", Gr. 5
W-4210	Flat washer, 1/2" USS
N-4301	Rev lock nut, 1/2-13
Y2526-402	Flat washer, 9/16 ID x 1-3/4 OD x 1/4" thick
H-4220	Bolt, 1/2-13 x 2-1/2", Gr. 5
H-4201	Bolt, 1/2-13 x 2", Gr. 5
Y2960-218	Coulter arm
Y2550-115	Seal
Y2550-027	Cone(bearing), LM67048
Y2550-029	Cup, LM67010
Y2900-102	Hub sub-assembly(includes cups)
Y2526-449	Flat washer, 5/8" x 1/4" thick
Y2571-162	Blade, 16" dia., wavy, 13 flute
N-5502	Slotted hex nut, 5/8-18
Y2531-102	Cotter pin, 1/8 x 1-1/4"
Y2570-375	Hub cap
Y2505-339	Carriage bolt, 1/2-13 x 1-1/2", Gr. 5
Y2525-352	Medium lockwasher, 1/2"
N-4001	Nut, 1/2-13

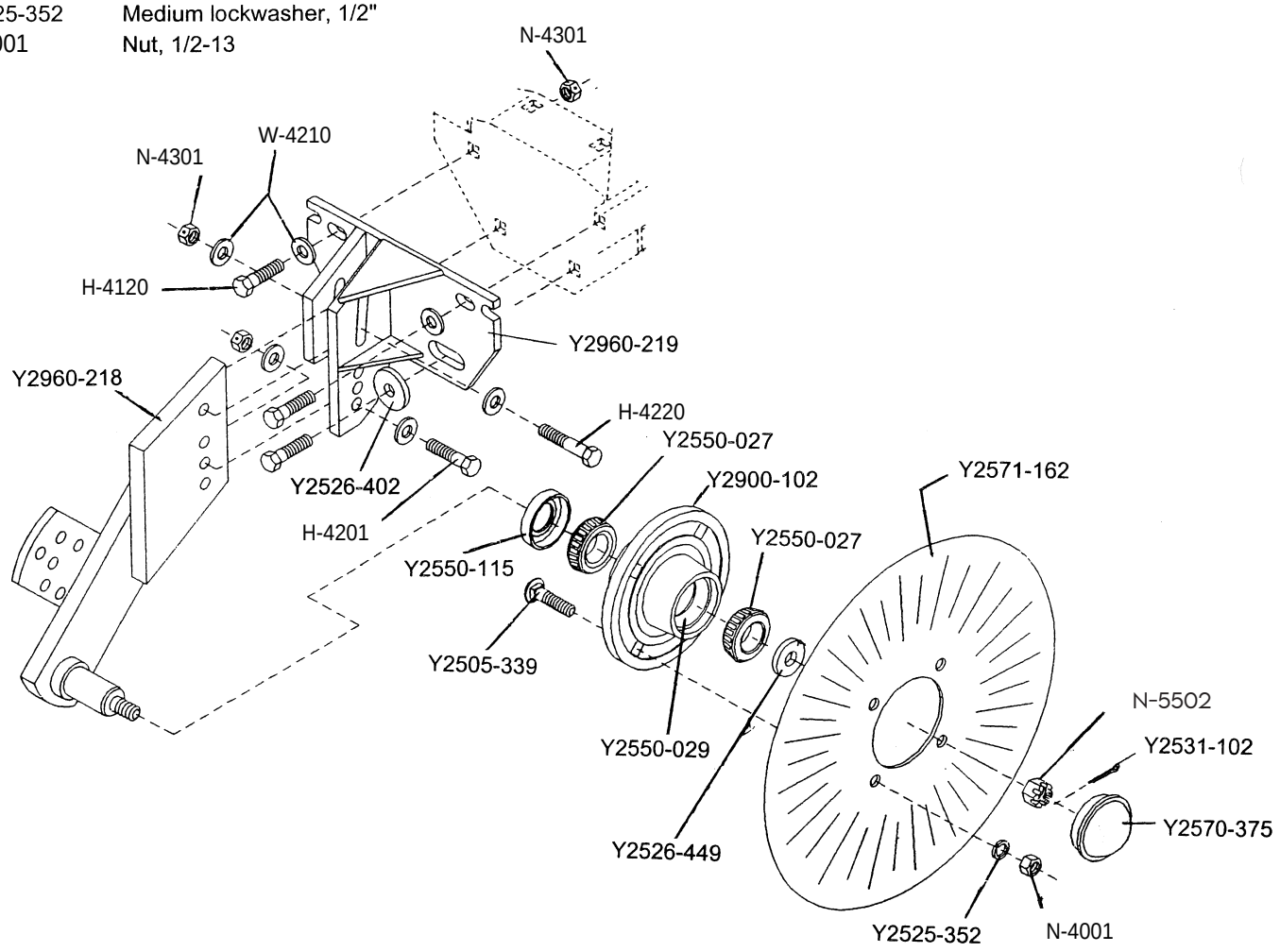

NG+3 Row Unit

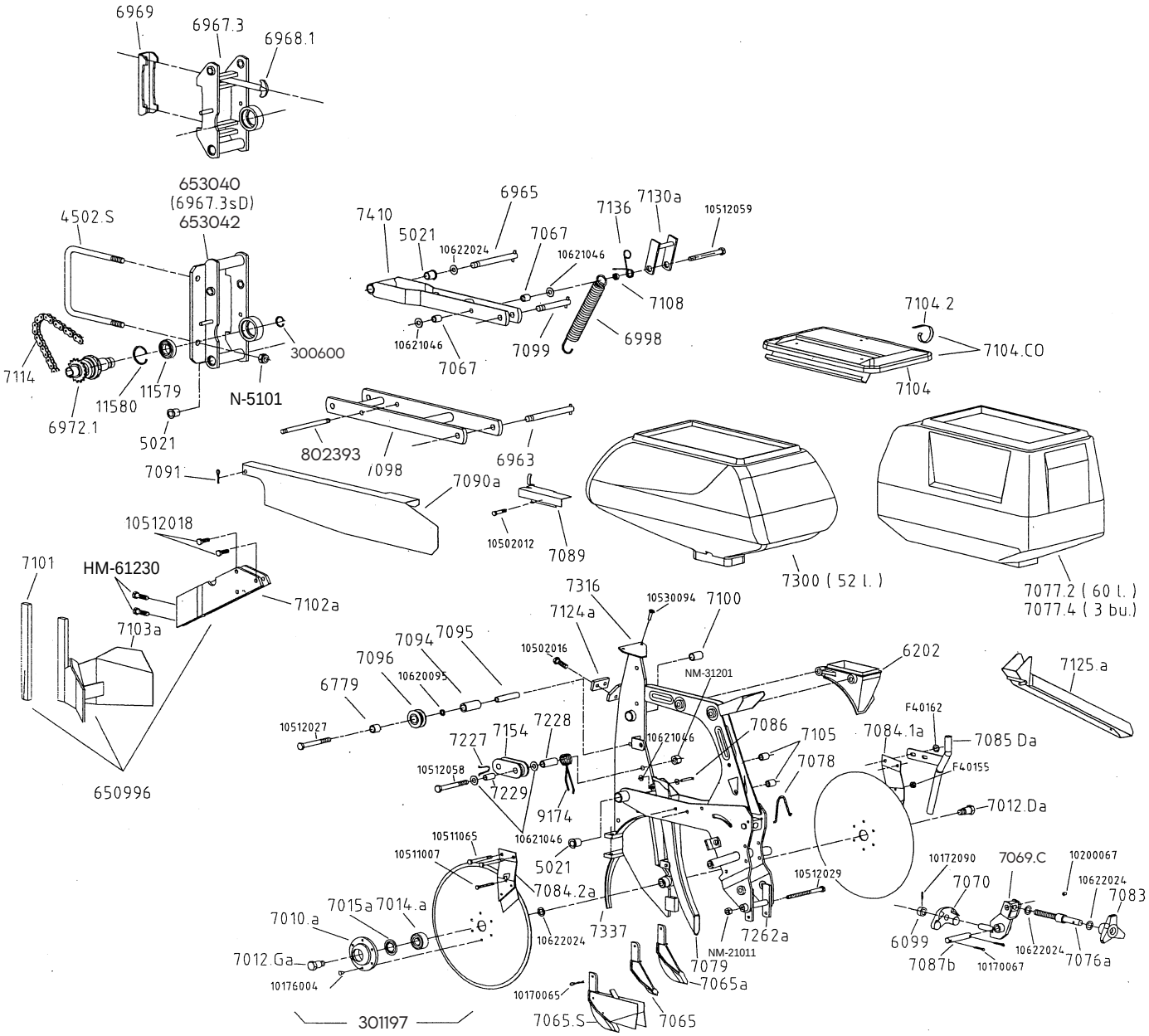
6969
6967.3
6968.1
653040
(6967.3sD)
653042
4502.S
7410
5021
10622024
6965
7067
10621046
7136
7130a
10512059
7108
6998
7099
7067
10621046
7104.2
7104.CO
7104
300600
7114
11579
11580
6972.1
5021
N-5101
802393
7098
6963
7091
7090a
10502012
7089
7300 (52 l.)
7077.2 (60 l.)
7077.4 (3 bu.)
10512018
HM-61230
7101
7102a
7103a
650996
7316
10530094
7100
7124a
7094
7095
7096
10620095
6779
10502016
NM-31201
6202
7125.a
10512027
7227
7154
7228
10621046
7086
7105
7078
F40162
7084.1a
7085 Da
F40155
10512058
7229
9174
7012.Da
10511065
10511007
10621046
5021
7084.2a
10512029
10172090
7069.C
10200067
7070
10622024
7083
7015a
7014.a
7010.a
10622024
7337
7262a
6099
7087b
10170067
10622024
7076a
7012.Ga
10176004
NM-21011
7079
7065a
10170065
301197
7065.S
7065

NG+ 3 Row Unit

4502.S	U bolt, for 7"x7"
NM-51605	Nylon locknut, 16mm
5021	Bushing, self lubricated
6099	Collar with 6x25 roll pin
6202	Collar brace
6779	Bushing, self lubricated
300600	Snapring, 30mm
6963	Pivot pin, lower linkage, front & rear(165mm)
6965	Pivot pin, upper linkage, front(155mm)
6967.3	Clamp facing, 5x5 toolbar
653040	Clamp facing, 7x7 toolbar
6967.3SD	Clamp facing, 7x7, both flanges to the right
653042	Clamp facing, 7x7, both flanges to the left
6968.1	T bolt, 16mm
6969	Clamp plate, for 5x5 toolbar
6972.1	Slipclutch
6998	Spring
7010.A	Cast hub, uses 6x22 rivets
7012.DA	Removable spindle, righthand
7012.GA	Removable spingle, lefthand
7014.A	Bearing double disc opener (52042RS)
7015.A	Sealing washer
7065	Cast point
7065A	Cast V slice insert
7065.S	V shoe insert for small seed
7067	Spacers for unit lockup bracket
301197	Opener disc complete w/bearing
7069.C	Bracket for wheel stop/depth control rod
7070	Swing bracket
7076A	Threaded for depth adjustment
7077.2	Seed hopper, standard, 60 ltr
7077.3	Seed hopper, Twin row, 60 ltr
7077.3A	Seed hopper, TwinRow/reversed, 60 ltr
7077.4	Seed hopper, 3 bushel
7077.UNR	Seed hopper, 50 ltr (1.4 bu, uses7088.n lid)
7078	Wire stop for depth control rod
7079	Blank seed tube
7083	Handwheel, depth control, uses 6x30 roll pin
7084.1A	Scraper, RH
7084.2A	Scraper, LH
7085.DA	Insecticide drop tube, right
7085.GA	Insecticide drop tube, left
7086	Pin for seed tube attachment
7087.B	Pin, uses 2-5x40 cotter pins
7088.N	Lid for 7077.UNR hopper
7089	Small chain guard
7090.A	Drive chain guard
7091	Clip pin
7094	Spacer bushing
7095	Pivot pin, takes 10x100 bolt
7096	Chain roller (cast iron)
7098	Lower parallel linkage arm
7099	Pivot pin, upper linkage, rear(75mm)
7100	Bushing, self lubricated
7101	Front point, clod remover
7102.A	Mounting bracket, clod remover
7103.A	Clod remover
650996	Clod remover assy. (7101, 7102.A, 7103.A)
7104.CO	Lid complete w/spring clip
7104.2	Spring clip
7105	Spacer
7108	Bushing, 12 x 18.5 x 6mm
7114	Drive chain, 5R, 124 links w conn. Link
7124.A	Unit stop
7125.A	Seed chute
802393	Threaded rod
7130.A	Unit lock up bracket
7136	Spring
7154	Plastic idler block
7227	Spring stop
7228	Spacer bushing (14x20x50mm)
7229	Carrier bushing (13x16x32mm)
7262.A	Spring support bracket
7300	Seed hopper, 52 ltr.
7316	Main frame NG+3
7337	Protection point, double disc openers
7410	Upper parallel linkage arm
9174	Spring, chain tightener
11579	Bearing, safety clutch (60062RS)
11580	Snapring, 55mm
10200067	Red cap, depth indicator
10176004	Rivet, 6 x 22
10172090	Roll pin, 6x25
10172091	Roll pin, 6x30
10170015	Cotter pin, 2.5x25, (for pin #7086)
10170065	Cotter pin, 5x30
10170067	Cotter pin, 5x40
10530094	Phillips head screw, 6 x 20
10511007	Hex head bolt, 6 x 100
10511065	Hex head bolt, 8 x 80
10502012	Hex head bolt, 10 x 15
10502016	Hex head bolt, 10 x 25
10512018	Hex head bolt, 10 x 35
10512027	Hex head bolt, 10 x 100
10512029	Hex head bolt, 10 x 120
HM-61230	Hex head bolt, 12 x 30
10512058	Hex head bolt, 12 x 110
10512059	Hex head bolt, 12 x 120
10620095	Washer, 10.5x27x2
10621026	Washer, 13x18x2
10621046	Washer, 13x27x2
10622024	Washer, 16.5x26x1
N-5101	Nylon lock nut, 5/8"
NM-0605	6mm nut
NM-1801	8mm nut
NM-21011	10mm nut
NM-31201	12mm nut

NG+3 Gauge Wheel Arm

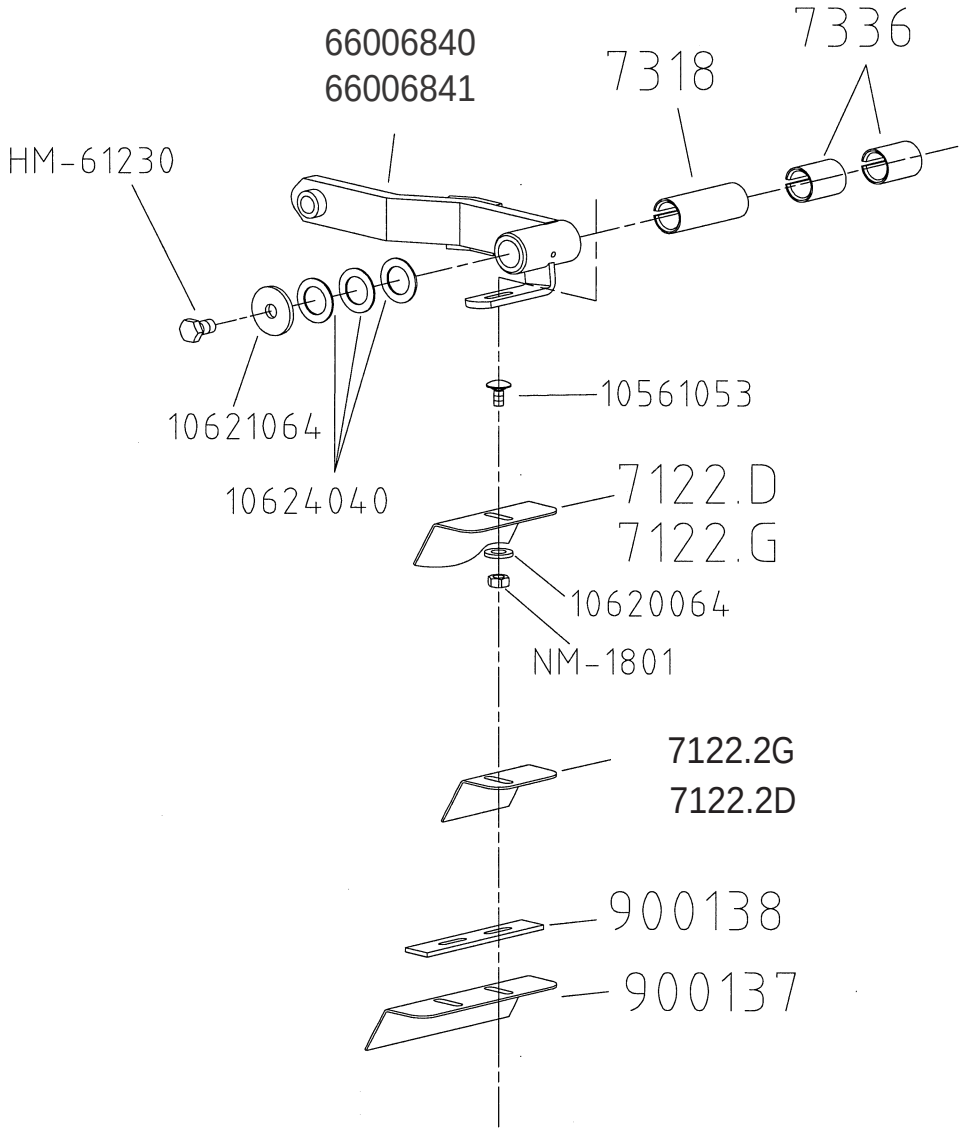

PART No.	DESCRIPTION
7122.D	Scraper blade, RH, gauge wheel
7122.G	Scraper blade, LH, gauge wheel
66006840	Gauge wheel arm, RH, NG+3
66006841	Gauge wheel arm, LH, NG+3
7318	One piece bushing
7336	Two piece bushings
NM-1801	8mm nut
HM-61230	Bolt, 12x30
10561053	Carriage head bolt, 8x18
10620064	Washer, 8.5x16x2
10621064	Washer, 13x45x5
10624040	Washer, 33x45x1.5

PART No.	DESCRIPTION
7122.2G	Scraper blade, narrow, LH
7122.2D	Scraper blade, narrow, RH
900137	Scraper blade, for dual gauge wheel
900138	Blade extention bracket, dual gauge wheel
10118	Grease Zerk, 6mm

NG+3 Closing Wheel Assy.

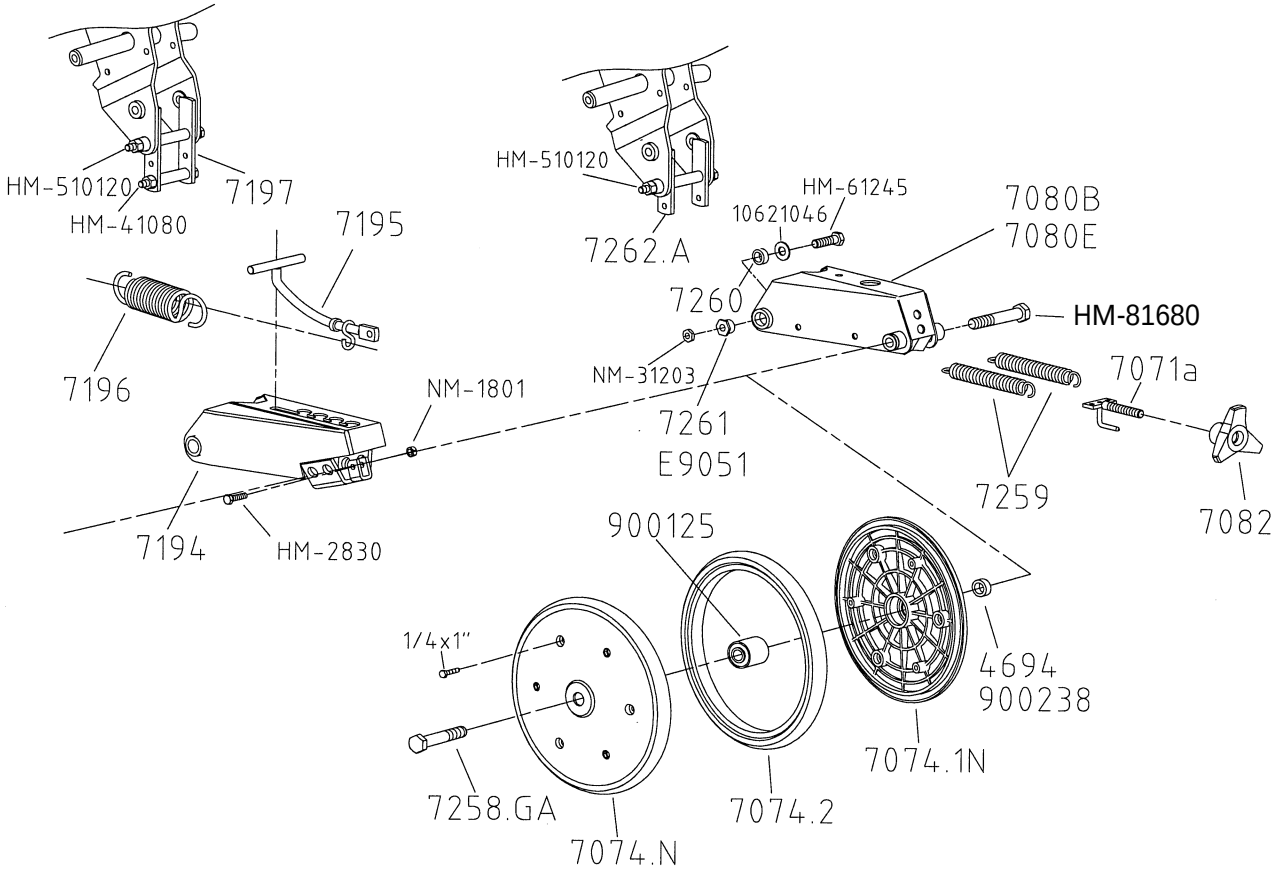

PART No.	DESCRIPTION
900125	Bearing, 40mm, press wheel
900238	Bushing spacer, narrow, 8mm wide
4694	Bushing spacer, standard, 10mm wide
7074.N	Press wheel complete
7074.1N	Rim half
7074.2	Tire only, 1x12"
KA6597	Cast iron press wheel complete
7071.A	Threaded rod for closing wheel adjustment
7080.B	Closing wheel bracket, standard
7080.E	Closing wheel bracket, narrow
7082	Handwheel, closing wheel adjustment
7194	Closing wheel bracket, for T-handle assembly
7195	T-Handle
7196	Spring, for T-handle
7197	Spring support bracket, for T-handle assembly

PART No.	DESCRIPTION
HM-81680	Bolt, 16x80 RH for 7074.N
7258.GA	Bolt, 16x80 LH for 7074.N
7259	Spring, closing wheel
7260	Spacer bushing
7261	Threaded pivot bushing
7262.A	Spring support bracket
E9051	Eccentric pivot bushing
HM-2830	Hex head bolt, 8 x 30
HM-41080	Hex head bolt, 10 x 80
HM-510120	Hex head bolt, 10 x 120
HM-61245	Hex head bolt, 12 x 45
NM-1801	Nut, 8mm
NM-31203	Jam nut, 12mm
NM-31205	Nylon locknut, 12mm, for E9051
HM-61260	Hex head bolt, 12 x 60, for E9051
10621046	Washer, 13x27x2

NG+3,4 Gauge Wheels

7073.N	Gauge wheel complete (black nylon rim)
900125	Bearing, 40mm (DAC1640442RSL)
7073.2	Tire only, standard
7073.3	Outer rim (black nylon)
7073.3SA	Inner rim (black steel)
HM-81680	RH Hex head bolt 16 x 80
7258.GA	LH Hex head bolt 16 x 80
HM-2831	8x30 Flange head bolt
HM-2845	8x45 Flange head bolt
NM-1812	8mm nylon locknut

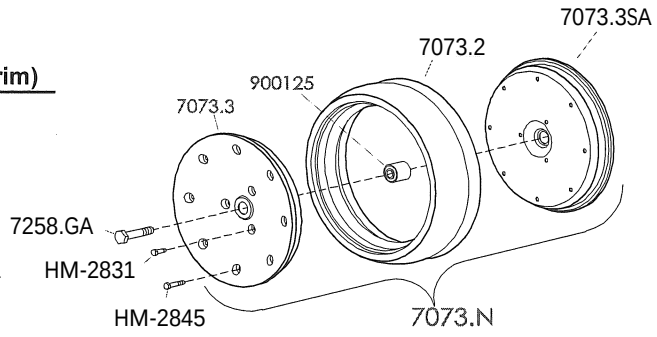

7073.NDI	Dual gauge wheel, inside
900125	Bearing, 40mm (DAC1640442RSL)
7073.2	Tire only, standard
7073.3SA	Rim, (black steel)

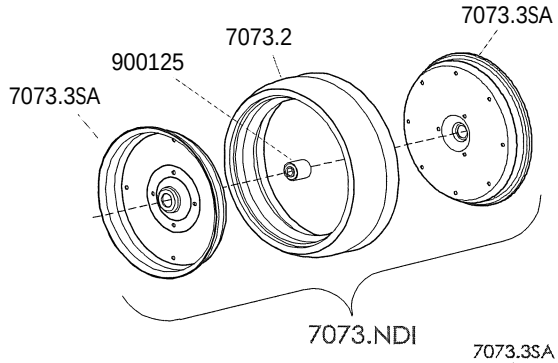

7073.NDO	Dual gauge wheel, outside
7073.2	Tire only, standard
7073.3	Outer rim (black nylon)
7073.3SA	Rim, (black steel)
HM-2831	8x30 Flange head bolt
900270.1	Spacer, 3-3/4" length

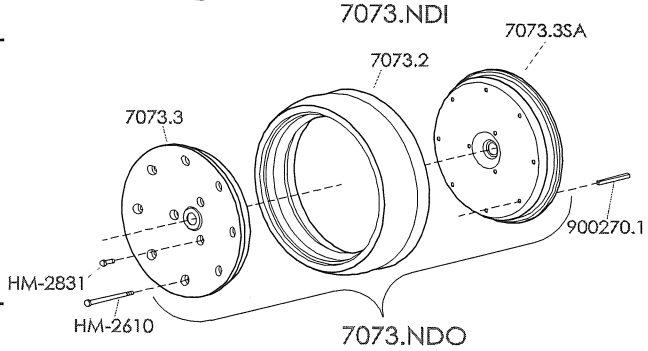

7073.SA	Narrow gauge wheel, complete
900125	Bearing, 40mm (DAC1640442RSL)
7073.1SA	Outer rim (steel)
7073.2S	Tire only, narrow
7073.4SA	Inner rim (black steel)
7258.DS	RH Hex bolt 16 x 80, W/ 7/32" thick bolt head
7258.GS	LH Hex bolt 16 x 80, W/ 7/32" thick bolt head
H-2065	5/16-18 x 5/8", Flange head bolt
N-1110	5/16 -18 Flange nut

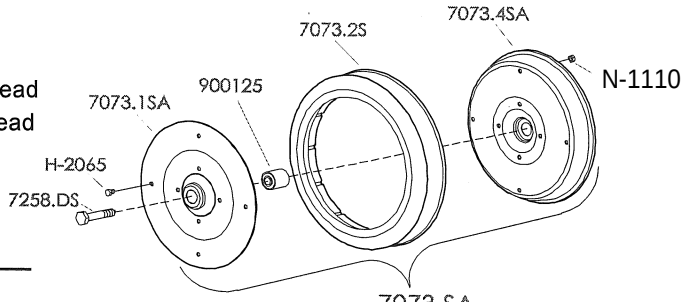

100369	Flat narrow gauge wheel
KD10473	Bearing housing
900405	Spacer
7073.1SB	Outer rim (steel)
7073.2S	Tire only, narrow
7073.3SB	Inner rim (black steel)
7258.DSS	RH Bolt 16 x 60, W/ 7/32" thick bolt head
7258.GSS	LH Bolt 16 x 60, W/ 7/32" thick bolt head
F24050	1/4" -20 x 5/8 Button head socket screw
F24068	5/16" -18 x 5/8" Button head socket screw
N-0615	1/4 -20 Flange lock nut
N-1110	5/16 -18 Flange lock nut
KA2014	Bearing

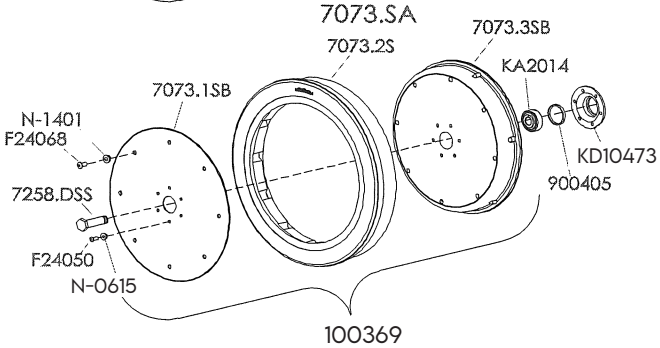

NG+3

Quick Change Down Pressure, For Use with Standard Linkage
Sub assembly - #KA2068Q

ITEM	PART No.	DESCRIPTION
1	KA2068	Spring
2	800208	Double Spring Plate
3	800145.B	Spring Extension
4	800144	Notch Counter Clamp
5	800143.A	Adjustable Notches
6	800228	Easy Grip pin w 1/2" Hairpin cotter pin
7	900113	Spacer bushing
8	N-4600	1/2" Jam nut
9	H-4130	1/2" x 1 3/4" Hex bolt
10	W-4210	1/2" Flat washer, Large
11	H-4220	1/2" x 2 1/2" Hex bolt
12	H-4301	1/2" x 3" Hex bolt
13	W-4410	1/2" Flat washer
14	N-4301	1/2" Rev Lock nut
15	W-4610	1/2" Lock washer

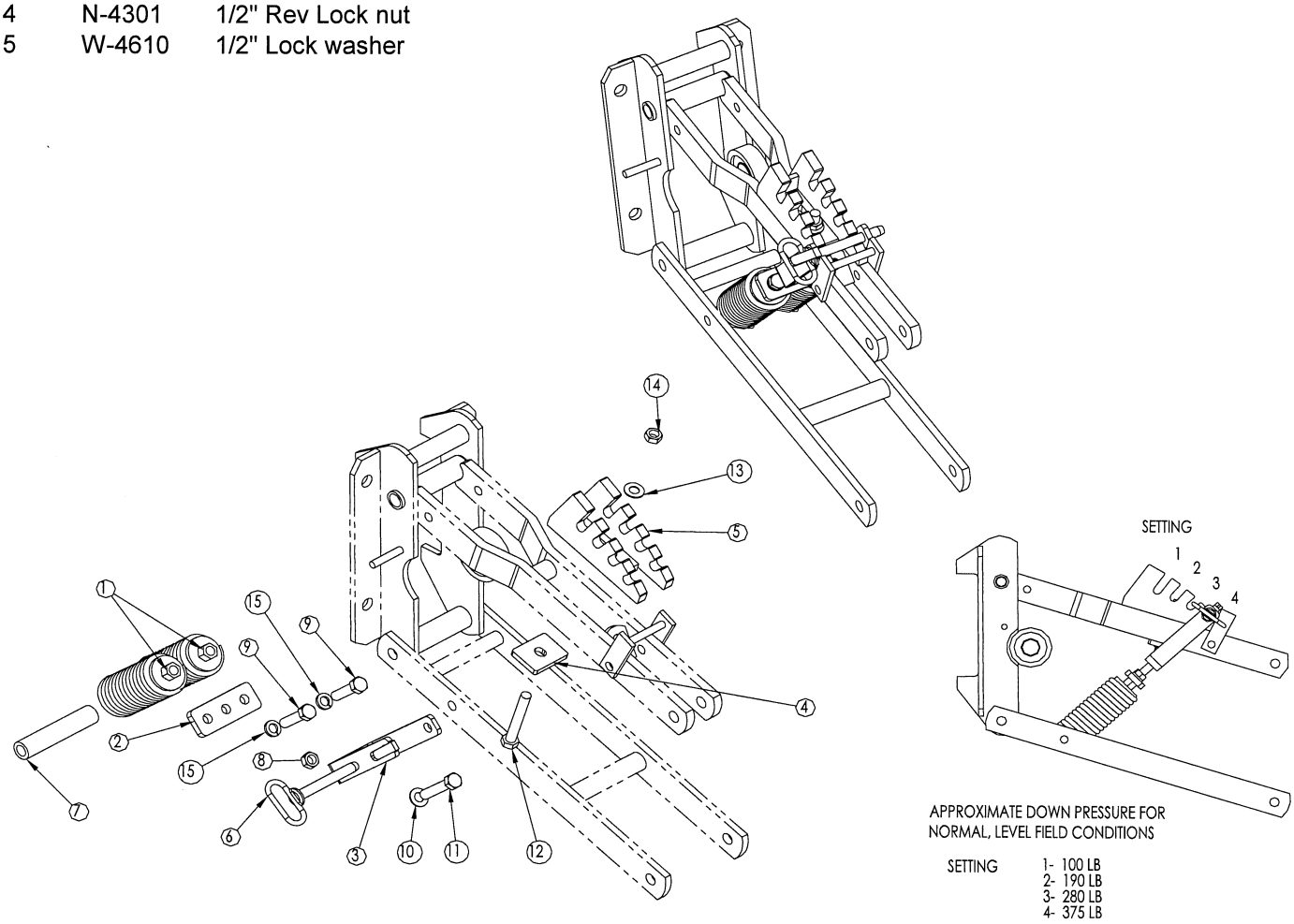

NG+3

Quick Change Down Pressure, For Use with Narrow Bottom Linkage
Sub assembly - #KA2068QT

ITEM	PART No.	DESCRIPTION
1	KA2068	Spring
2	800208	Double Spring plate
3	800145.B	Spring Extension
4	800144	Notched counter clamp
5	800143.A	Adjustable notches
6	800228	Easy Grip Pin w/ 1/2" Hairpin Cotter Pin
7	800211	Narrow linkage adapter
8	N-4600	1/2" Jam nut
9	H-4130	Hex bolt 1/2" x 1 3/4"
10	W-4210	1/2" Flat washer, Large
11	H-4301	Hex bolt 1/2" x 3
12	W-4410	1/2" Flat washer
13	N-4301	1/2" Rev lock nut
14	W-4610	1/2" Lock washer
15	F42012	5/16" U-Bolt
16	N-1100	5/16" Lock nut

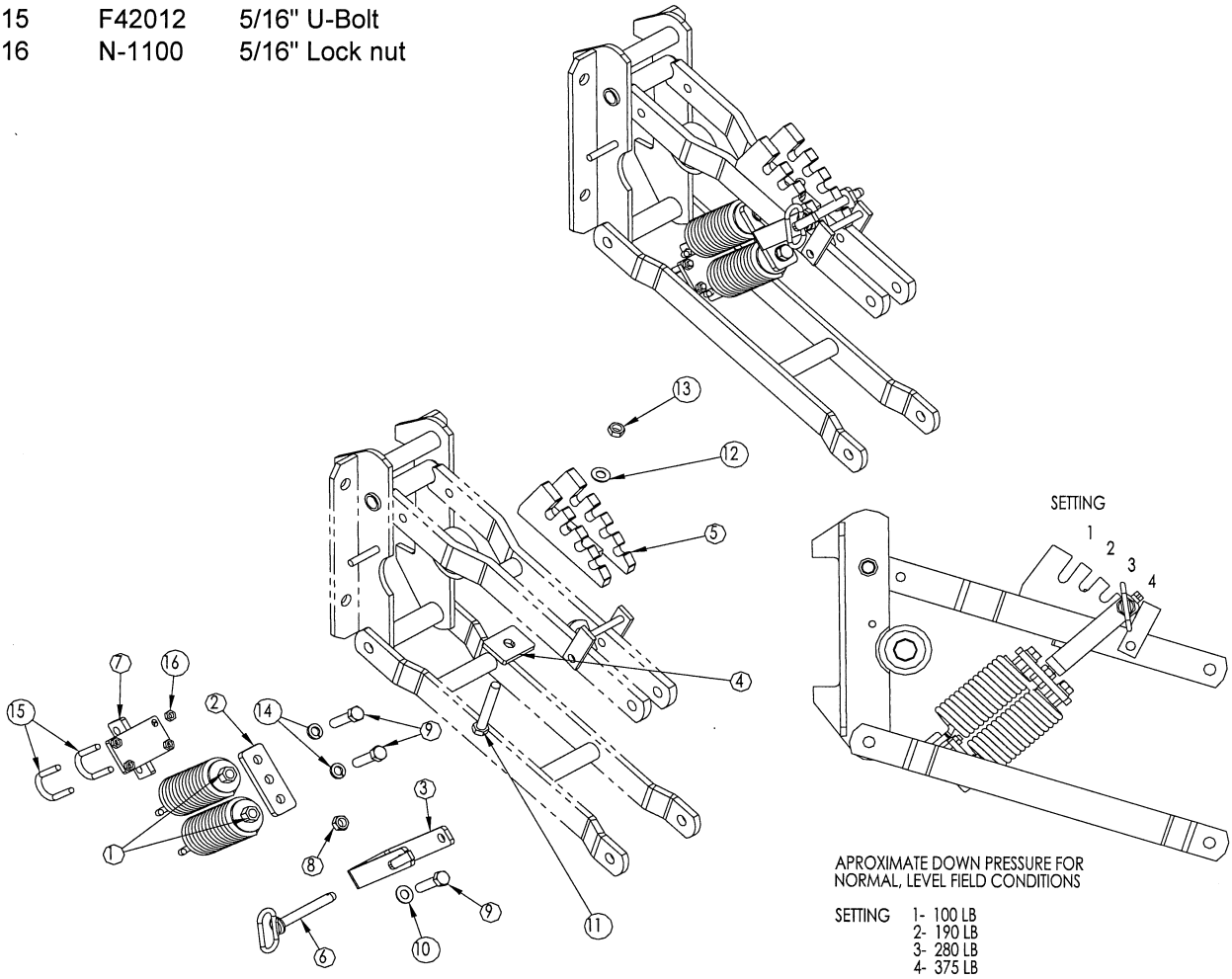

MONOSHOX® LINKAGE WITH STANDARD FACE CLAMP

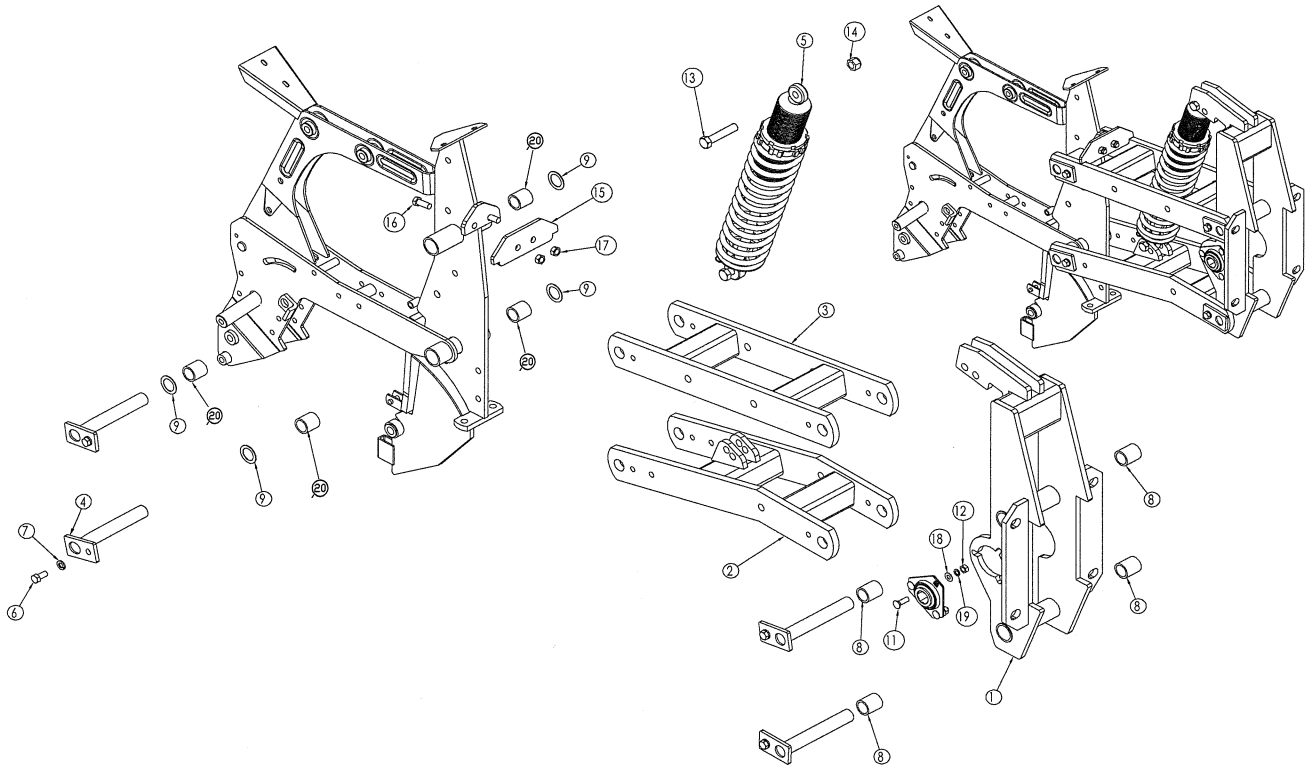

ITEM	PART #	DESCRIPTION
1	800404.1	Face clamp
2	800404.3	Lower Link
3	800404.2	Upper Link
4	800404.4	Pin
5 **	Q2679-1B	Shock Absorber
	Q14-110	Spring for Shock
	QCK2607	Coil over Kit
6	H-3075	Bolt, 3/8-16 x 3/4"
7	W-2610	Lock Washer, 3/8"
8	800404.6	Bushing, Oil Impregnated
9	10623061	Flat Washer, 26mm x 41mm x 1mm
10	300597	Bearing, 7/8 Hex Bore
	300596	Flangette for Bearing
11	CB-1110	Carriage Bolt, 5/16-18 x 1"
12	N-1000	Nut, 5/16"
13	H-4220	Bolt, 1/2-13 x 2-1/2"
14	N-4101	Nylon Locknut, 1/2"
15	800432	Unit Stop
16	HM-41025	Bolt , M10 x 25
17	NM-21011	Nut, M10
18	W-1210	Flat Washer, 5/16"
19	W-1610	Lock Washer, 5/16"
	QT114W	Spanner Wrench pkg. (contains 2 wrenches)
	66006160	Unit frame only
	900259	Unit drive chain, #41, plated, 124 links, for units W/OUT TIMING SYSTEM
20	10160028	Bushing, MONOSHOX Unit Frame

** 100017-Monoshox Assembly complete

MONOSHOX® LINKAGE WITH OFFSET FACE CLAMP, TWIN ROW

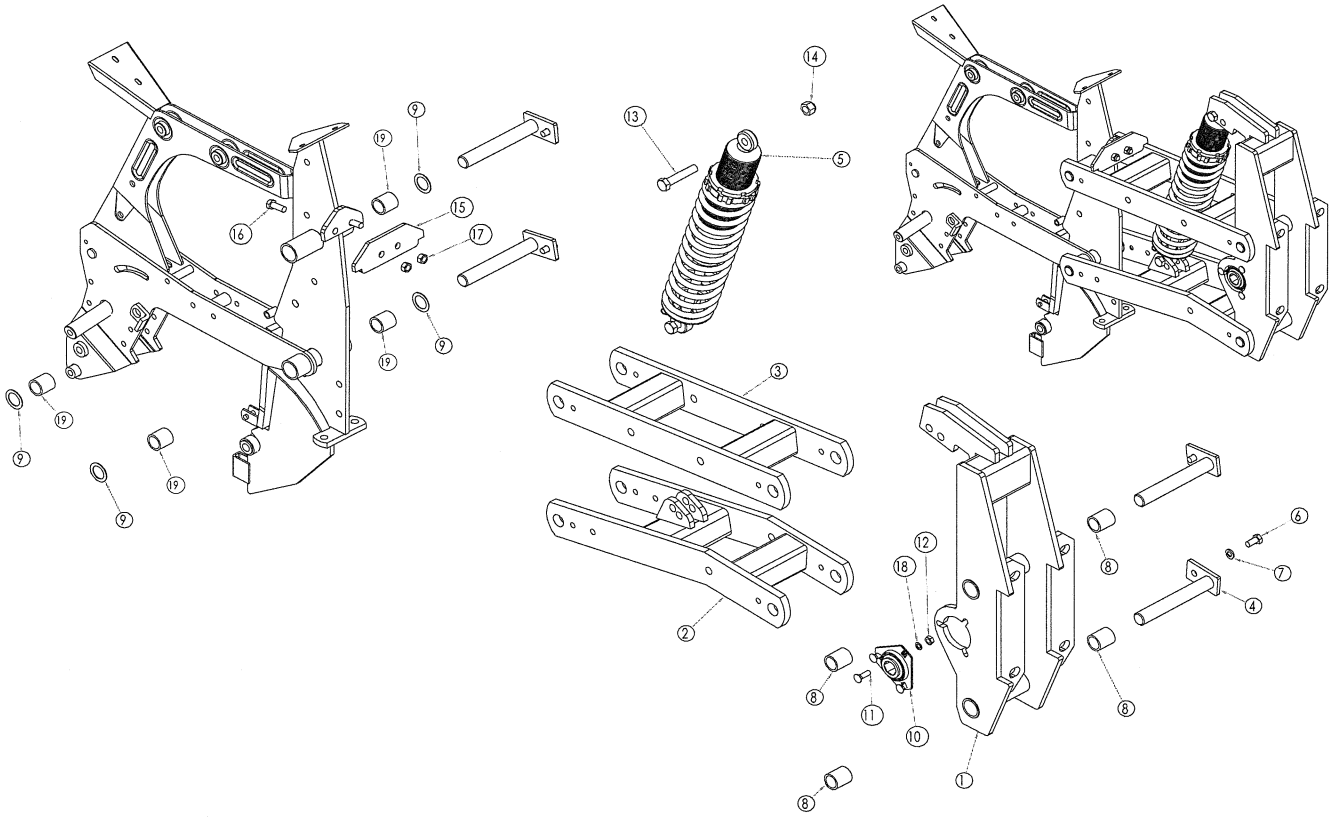

ITEM	PART #	DESCRIPTION
1	800404.5	Face clamp, w/inside ears, for offset unit
2	800404.3	Lower Link
3	800404.2	Upper Link
4	800404.4	Pin
5 **	Q2679-1B	Shock Absorber
	Q14-110	Spring for Shock
	QCK2607	Coil over Kit
6	H-3075	Bolt, 3/8-16 x 3/4"
7	W-2610	Lock Washer, 3/8"
8	800404.6	Bushing, Oil Impregnated
9	10623061	Flat Washer, 26mm x 41mm x 1mm
10	300597	Bearing, 7/8 Hex Bore
	300596	Flangette for Bearing
11	CB-1110	Carriage Bolt, 5/16-18 x 1"
12	N-1000	Nut, 5/16"
13	H-4220	Bolt, 1/2-13 x 2-1/2"
14	N-4101	Nylon Locknut, 1/2"
15	800432	Unit Stop
16	HM-41025	Bolt , M10 x 25
17	NM-21011	Nut, M10
18	W-1210	Flat Washer, 5/16"
	QT114W	Spanner Wrench pkg. (contains 2 wrenches)
	66006160	Unit frame only
	7114.TR	Unit drive chain, #41, plated, 118 links, for units WITH TIMING SYSTEM
19	10160028	Bushing, MONOSHOX Unit Frame

** 100017-Monoshox Assembly complete

NO TILL COULTER
Unit Mounted Standard Linkage
#YL-527

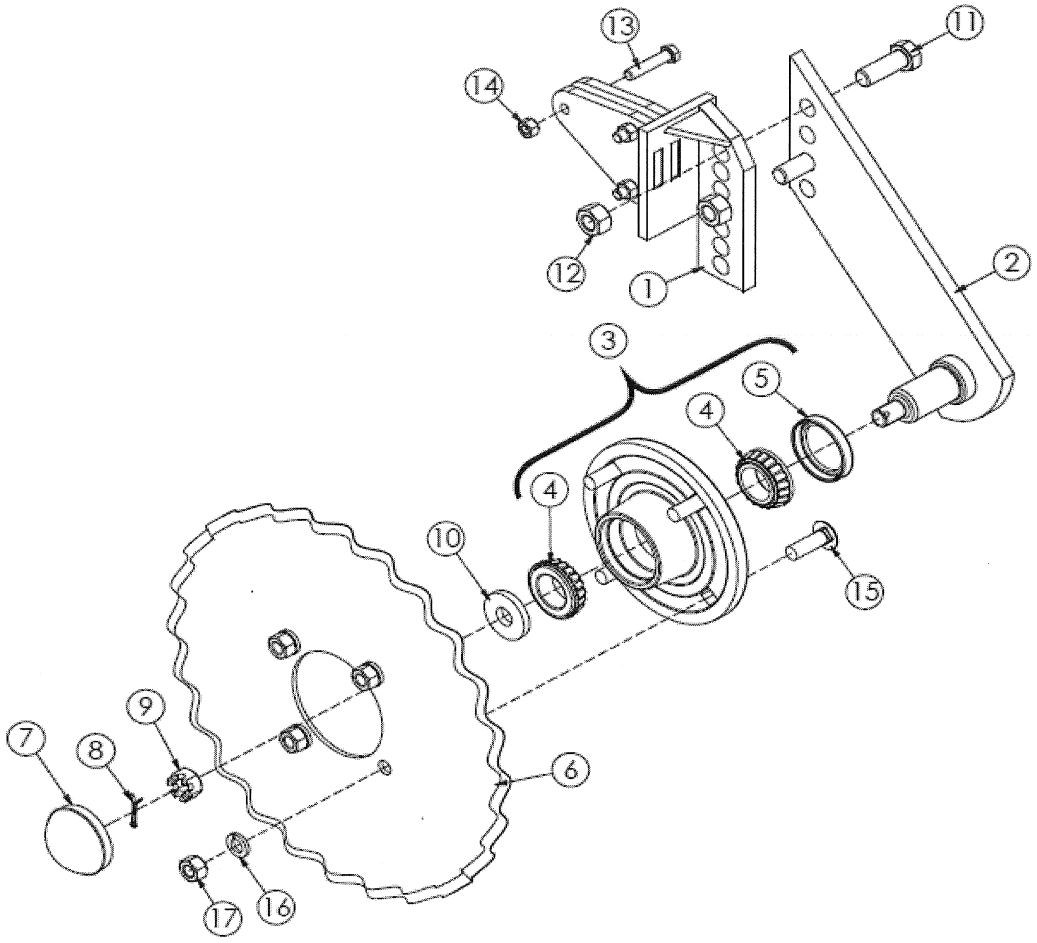

ITEM	PART #	DESCRIPTION
1	200340	Unit Mount Bracket
2	L527-100	Coulter Arm
3	Y2900-102	Hub Sub Assembly
4	Y2550-027	Cone, LM67048
5	Y2550-115	Seal
6	Y2571-166	25 Flute Blade, .157 x 14.56"
7	Y2570-375	Hub Cap
8		Cotter Pin, 1/8 x 1 1/4
9	N-5502	Castle Hex Nut, 5/8 - 18
10	Y2526-449	5/8 Flatwasher, 1/4 Thick
11	H-5130	Hex Head Bolt, 5/8 -11 x 1 3/4 GR 8
12	N-5301	Reversable Lock Hex Nut 5/8 - 11
13	H-3130	Hex Head Bolt, 3/8 -16 x 1 3/4 GRD 8
14	N-2300	Lock Nut 3/8 - 16
15	CB-4411	Carriage Head Bolt, 1/2 -13 X 1 1/2 GR 5
16	W-4610	Lock Washer, 1/2"
17	N-4001	Hex Nut, 1/2 - 13

NG+4 ROW UNIT, 7x7

SELECT CORRECT SERVICE PART NUMBER FROM TABLE:

	6963*	6965*	7099*	5021*
PIN STYLE PIVOT PIN:	6963	6965	7099	5021
BOLT STYLE PIVOT PIN (10A & LATER S/N):	6963.C		7099.C	5021.2

NOTE: CORRECT BUSHING (5021*) SHOULD BE USED WITH CORRESPONDING PIN / BOLT

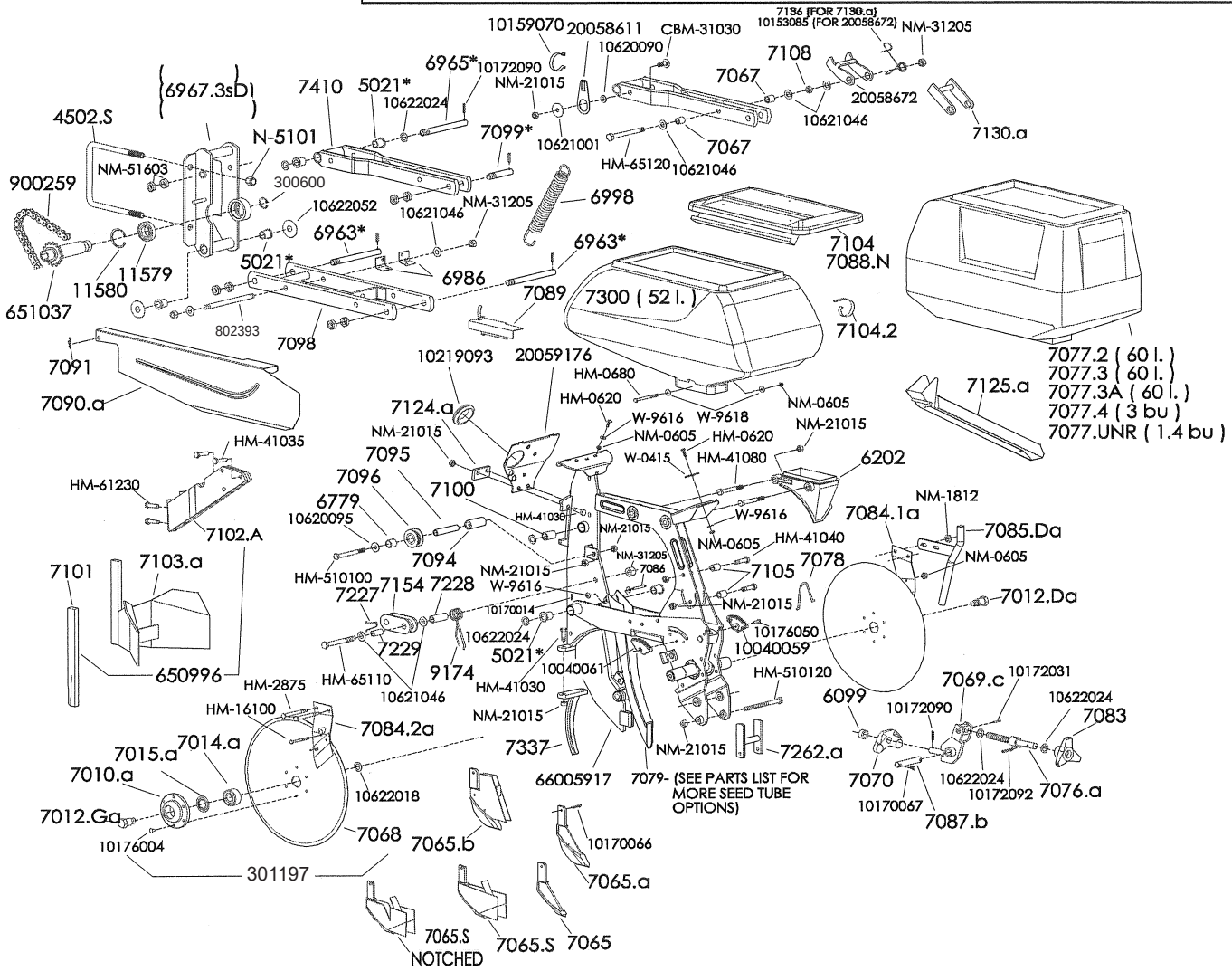

PART No.	DESCRIPTION
4502.S	U bolt, for 7" x 7" x 5/8-11
5021*	SEE TABLE ABOVE, Bushing
5021.2	Bushing. S/N 10A & LATER
6099	Collar with 6x25 roll pin
6202	Collar brace
6779	Bushing, self lubricated
300600	Snapring, 30mm
6963 *	SEE TABLE ABOVE, Pivot Pin.
6963.C	Pivot Bolt, Lower Linkage. S/N 10A & LATER
6965 *	SEE TABLE ABOVE, Pivot Pin.
6967.3	Clamp facing, 5x5 toolbar
653040	Clamp facing, 7x7 toolbar
6967.3SD	Clamp facing, 7x7 toolbar R.H.

PART No.	DESCRIPTION
653042	Clamp facing, 7x7 toolbar L.H.
6968.1	T-bolt W/ Nut for 5x5 toolbar, 16mm
6969	Clamp Plate 5x5 toolbar
801644	Spring Clip Stainless
6998	Spring
7010.A	Cast hub, uses 6x22 rivets
7012.DA	Removable spindle, righthand
7012.GA	Removable spingle, lefthand
7014.A	Bearing double disc opener (52042RS)
7015.A	Sealing washer
7065	Cast point
7065.A	Cast V slice insert
7065.B	V slice insert
7065.S	V shoe insert for small seed
7067	Spacers for Unit Lock-up bracket
7068	Opening disc only
7069.C	Bracket for wheel stop/depth control rod, NG+4

PART No.	DESCRIPTION
7070	Swing bracket
7076.A	Threaded for depth adjustment
7077.2	Seed hopper, standard, 60 ltr
7077.3	Seed hopper, Twin row, 60 ltr
7077.3A	Seed hopper, TwinRow/reversed, 60 ltr
7077.4	Seed hopper, 3 bu.
7077.UNR	Seed hopper, 50 ltr (1.4 bu, uses7088.n lid)
7078	Wire stop for depth control rod
7079	Seed tube, blank
7079.1	Seed tube, w/ hole, no sensor
7079.2S	Seed tube, w/ sensitive sensor
7079.3	Seed tube, Peanut, no sensor
7079.3S	Seed tube, Peanut, w/ sensor
7079.4	Seed tube, Beet, no sensor
7086	Seed tube, Pin
7083	Handwheel for depth control, uses 6x30 roll pin
7084.1A	Right outside scraper
7084.2A	Left outside scraper
7085.DA	Insecticide drop tube, right
7085.GA	Insecticide drop tube, left
7086	Pin for seed tube attachment
7087.B	Pin, uses 2-5x40 cotter pins
7088.N	Lid for 7077.UNR hopper
7089	Small chain guard
7090.A	Drive chain guard
7091	Clip pin
7094	Spacer bushing
7095	Pivot pin, takes 10x100 bolt
7096	Chain roller (cast iron)
7098	Lower parallel linkage arm
7099 *	SEE TABLE ON PREVIOUS PAGE, Pivot Pin
7099.C	Pivot Bolt, Upper Linkage Rear, S/N 10A & LATER
7100	Bushing, self lubricated
7101	Front point, clod remover
7102.A	Mounting bracket, clod remover
7103.A	Clod remover
7104.CO	Lid complete w/spring clip
7104.2	Spring clip
7105	Spacer
7108	Bushing, self lubricated, Unit Lock-up
7124.A	Unit Stop
7125.A	Seed Emptying chute
802393	Threaded rod
7130.A	Unit lock up bracket NG+3 & Quick Adjust
7136	Spring for lock-up 7130.A
7154	Idler (7154.CO = Complete assembly)
7227	Spring Stop for Idler
7228	Spacer for Idler
7229	Carrier Bushing for Idler
7262.A	Spring support bracket
7300	Seed hopper, 52 ltr.
7337	Protection point, double disc openers

PART No.	DESCRIPTION
7410	Upper parallel linkage arm
9174	Spring, chain tightener
11579	Bearing, safety clutch (60062RS)
11580	Snapring, 55mm
650996	Clod remover, complete
651037	Sprocket 18T #41 Chain
900259	Drive chain, #41, 124 links w conn. Link
301197	Opening disc complete w/bearing
10040059	Depth Gauge Indicator, Right
10040061	Depth Gauge Indicator, Left
10159070	Vacuum Hose Spring Clip
10153085	Spring for lock-up 20058672
10170014	Split Pin, 2.5 x 20mm
10170066	Split Pin, 5 x 35mm
10170067	Split Pin, 5 x 40mm
10172031	Roll Pin, 3.5 x 25mm
10172090	Roll Pin, 6 x 25mm
10172092	Roll Pin, 6 x 35mm
10176004	Rivet, 6 x 22mm
10176050	Rivet, 6 x 16mm
10219093	Rubber Grommet
CBM-31030	Carrage Bolt, M10 x 30mm
HM-0620	Bolt, M6 x 20mm
HM-0680	Bolt, M6 x 80mm
HM-16100	Bolt, M6 x 100mm
HM-2875	Bolt, M8 x 75mm
HM-41030	Bolt, M10 x 30mm
HM-41040	Bolt, M10 x 40mm
HM-41080	Bolt, M10 x 80mm
HM-510100	Bolt, M10 x 100mm
HM-510120	Bolt, M10 x 120mm
HM-61230	Bolt, M12 x 30mm
HM-65110	Bolt, M12 x 110mm
HM-65120	Bolt, M12 x 120mm
N-5101	Nylock 5/8"
NM-0605	Nylock 6mm
NM-1812	Nylock 8mm
NM-21015	Nylock 10mm
NM-21205	Nylock 12mm
NM-51603	Jam Nut 16mm
NM-51605	Nylock 16mm
W-0415	Washer, 1/4" x 1-1/2" Stainless for Hopper
W-9616	Washer, 6.5 x 16 x 1mm
W-9618	Washer, 6.5 x 18 x 1.5mm
10620090	Washer, 10.5 x 20 x 2.5mm
10620095	Washer, 10.5 x 27 x 2mm
10621001	Washer, 10.5 x 40 x 2mm
10621046	Washer, 13 x 27 x 2mm
10622018	Washer, 16.5 x 21 x 1mm
10622024	Washer, 6 x 18 x 1mm
10622052	Washer, 17 x 50 x 1mm
20058611	Support for Vacuum Hose Spring Clip
20058672	Unit lock up bracket NG+4
20059176	Removable FacePlate NG+4
66005917	NG+4 Unit Frame
66006160	Monoshox Unit Frame

NG+4 ROW UNIT, 5x5

SELECT CORRECT SERVICE PART NUMBER FROM TABLE:

	6963*	6965*	7099*
PIN STYLE PIVOT PIN:	6963	6965	7099
BOLT STYLE PIVOT PIN (10A & LATER S/N):	6963.C		7099.C

NOTE: CORRECT BUSHING (5021*) SHOULD BE USED WITH CORRESPONDING

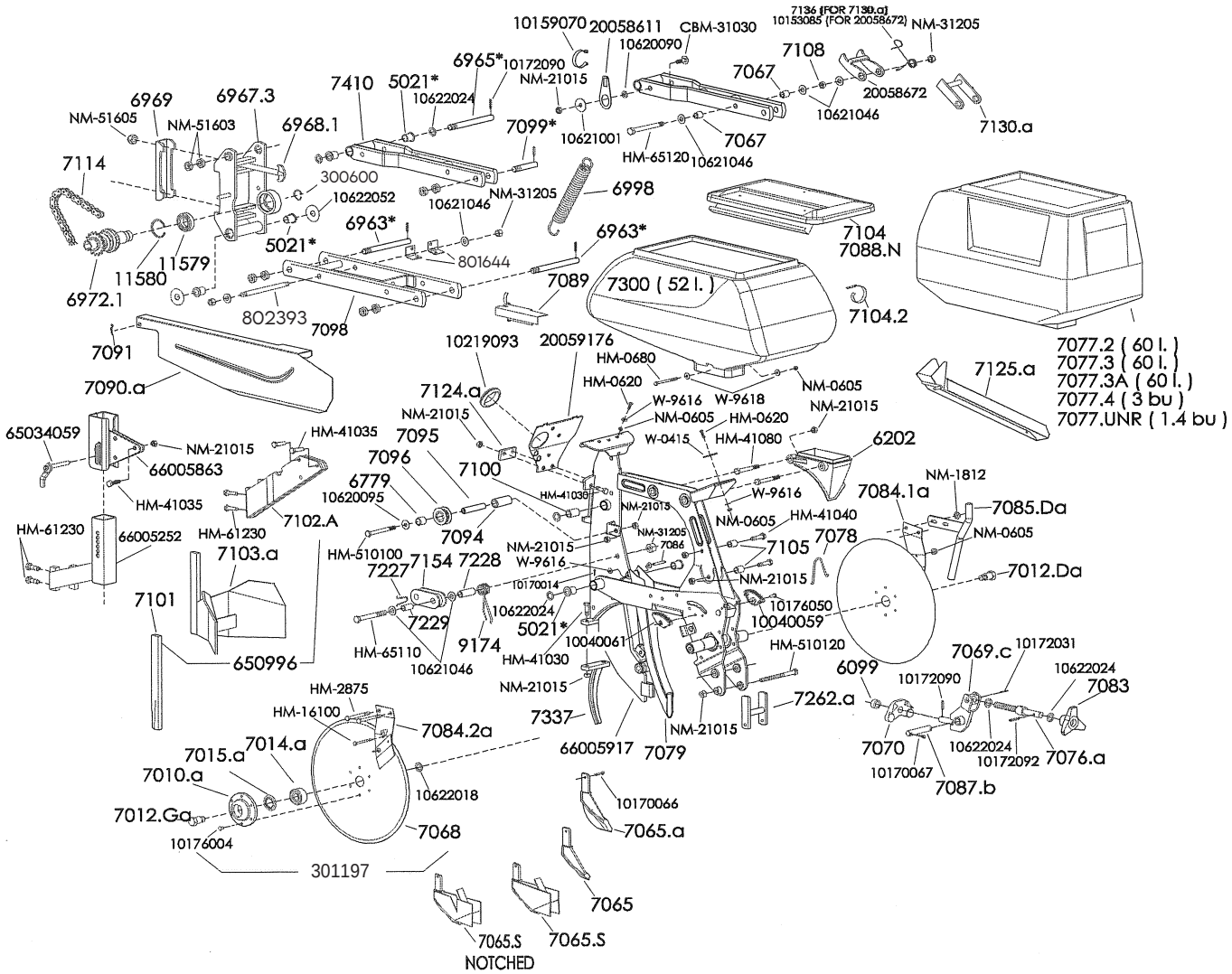

PART No.	DESCRIPTION
4502.S	U bolt, for 7" x 7" x 5/8-11
5021*	SEE TABLE ABOVE, Bushing
5022.2	Bushing. S/N 10A & LATER
6099	Collar with 6x25 roll pin
6202	Collar brace
6779	Bushing, self lubricated
300600	Snapring, 30mm
6963 *	SEE TABLE ABOVE, Pivot Pin.
6963.C	Pivot Bolt, Lower Linkage. S/N 10A & LATER
6965 *	SEE TABLE ABOVE, Pivot Pin.

PART No.	DESCRIPTION
6967.3	Clamp facing, 5x5 toolbar
6968.1	T-bolt W/ Nut for 5x5 toolbar, 16mm
6969	Clamp Plate 5x5 toolbar
6972.1	Slipclutch
801644	Spring Clip Stainless
6998	Spring
7010.A	Cast hub, uses 6x22 rivets
7012.DA	Removable spindle, righthand
7012.GA	Removable spingle, lefthand
7014.A	Bearing double disc opener (52042RS
7015.A	Sealing washer
7065	Cast point
7065.A	Cast V slice insert
7065.S	V shoe insert for small seed

PART No.	DESCRIPTION
7067	Spacers for Unit Lock-up bracket
7068	Opening disc only
7069.C	Bracket for wheel stop/depth control rod, NG+4
7070	Swing bracket
7076.A	Threaded for depth adjustment
7077.2	Seed hopper, standard, 60 ltr
7077.3	Seed hopper, Twin row, 60 ltr
7077.3A	Seed hopper, TwinRow/reversed, 60 ltr
7077.4	Seed hopper, 3 bu.
7077.UNR	Seed hopper, 50 ltr (1.4 bu, uses7088.n lid)
7078	Wire stop for depth control rod
7079	Blank seed tube
7079.1	Seed tube, w/ hole, no sensor
7079.2S	Seed tube, w/ sensitive sensor
7079.3	Seed tube, Peanut, no sensor
7079.3S	Seed tube, Peanut, w/ sensor
7079.4	Seed tube, Beet, no sensor
7086	Seed tube, Pin
7083	Handwheel for depth control
7084.1A	Right outside scraper
7084.2A	Left outside scraper
7085.DA	Insecticide drop tube, right
7085.GA	Insecticide drop tube, left
7086	Pin for seed tube attachment
7087.B	Pin, uses 2-5x40 cotter pins
7088.N	Lid for 7077.UNR hopper
7089	Small chain guard
7090.A	Drive chain guard
7091	Clip pin
7094	Spacer bushing
7095	Pivot pin, takes 10x100 bolt
7096	Chain roller (cast iron)
7098	Lower parallel linkage arm
7099 *	SEE TABLE ON PREVIOUS PAGE, Pivot Pin
7099.C	Pivot Bolt, Upper Linkage Rear, S/N 10A & LATER
7100	Bushing, self lubricated
7101	Front point, clod remover
7102.A	Mounting bracket, clod remover
7103.A	Clod remover
7104.CO	Lid complete w/spring clip
7104.2	Spring clip
7105	Spacer
7108	Bushing, self lubricated, Unit Lock-up
7114	Drive chain, 5R, 124 links w conn. Link
7124.A	Unit Stop
7125.A	Seed Emptying chute
802393	Threaded rod
7130.A	Unit lock up bracket NG+3 & Quick adjust
7136	Spring for lock-up 7130.A
7154	Idler (7154.CO = Complete assembly)
7227	Spring Stop for Idler
7228	Spacer for Idler
7229	Carrier Bushing for Idler
7262.A	Spring support bracket

PART No.	DESCRIPTION
7300	Seed hopper, 52 ltr.
7337	Protection point, double disc openers
7410	Upper parallel linkage arm
9174	Spring, chain tightener
11579	Bearing, safety clutch (60062RS)
11580	Snapring, 55mm
650996	Clod remover, complete
301197	Opening disc complete w/bearing
10040059	Depth Gauge Indicator, Right
10040061	Depth Gauge Indicator, Left
10159070	Vacuum Hose Spring Clip
10153085	Spring for lock-up 20058672
10170014	Split Pin, 2.5 x 20mm
10170066	Split Pin, 5 x 35mm
10170067	Split Pin, 5 x 40mm
10172031	Roll Pin, 3.5 x 25mm
10172090	Roll Pin, 6 x 25mm
10172092	Roll Pin, 6 x 35mm
10176004	Rivet, 6 x 22mm
10176050	Rivet, 6 x 16mm
10219093	Rubber Grommet
CBM-31030	Carrage Bolt, M10 x 30mm
HM-0620	Bolt, M6 x 20mm
HM-0680	Bolt, M6 x 80mm
HM-16100	Bolt, M6 x 100mm
HM-2875	Bolt, M8 x 75mm
HM-41030	Bolt, M10 x 30mm
HM-41035	Bolt, M10 x 35mm
HM-41040	Bolt, M10 x 40mm
HM-41080	Bolt, M10 x 80mm
HM-510100	Bolt, M10 x 100mm
HM-510120	Bolt, M10 x 120mm
HM-61230	Bolt, M12 x 30mm
HM-65110	Bolt, M12 x 110mm
HM-65120	Bolt, M12 x 120mm
NM-0605	Nylock 6mm
NM-1812	Nylock 8mm
NM-21015	Nylock 10mm
NM-21205	Nylock 12mm
NM-51603	Jam Nut 16mm
NM-51605	Nylock 16mm
W-0415	Washer, 1/4" x 1-1/2" Stainless for Hopper
W-9616	Washer, 6.5 x 16 x 1mm
W-9618	Washer, 6.5 x 18 x 1.5mm
10620090	Washer, 10.5 x 20 x 2.5mm
10620095	Washer, 10.5 x 27 x 2mm
10621001	Washer, 10.5 x 40 x 2mm
10621046	Washer, 13 x 27 x 2mm
10622018	Washer, 16.5 x 21 x 1mm
10622024	Washer, 6 x 18 x 1mm
10622052	Washer, 17 x 50 x 1mm
20058611	Support for Vacuum Hose Spring Clip
20058672	Unit lock up bracket NG+4
20059176	Removable FacePlate NG+4
65034059	Pin, Clod remover Adjustment
66005252	Clod remover Adj. Bracket
66005863	Clod remover Mtg. Bracket
66005917	NG+4 Unit Frame

GAUGE WHEEL ARM ASSEMBLY

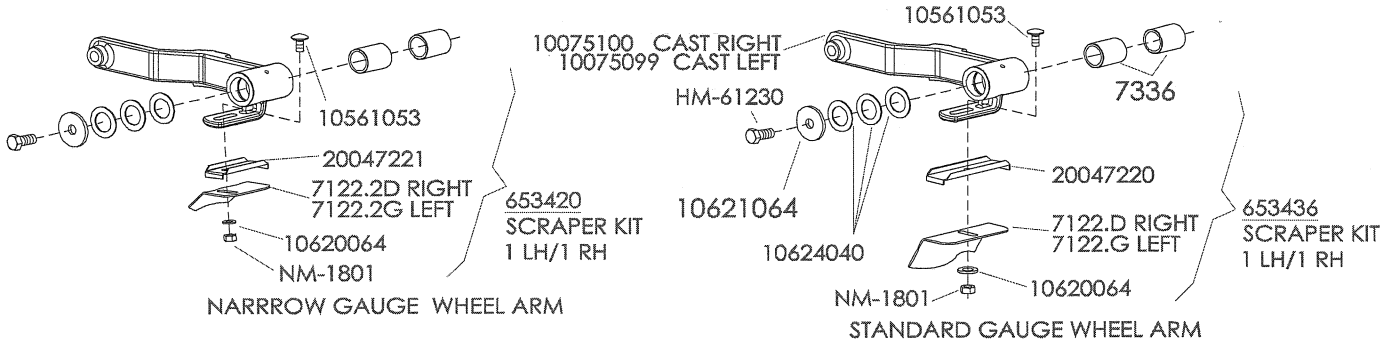

PART No.	DESCRIPTION
7122.D	Scraper blade RH std. g.w.
7122.G	Scraper blade LH std. g.w.
7122.2D	Narrow Wheel Scraper blade, RH
7122.2G	Narrow Wheel Scraper blade, LH
7336	Two piece bushing
10075100	Cast Gauge wheel arm RH
10075099	Cast Gauge wheel arm LH
10561053	Carriage bolt M8 x 18

PART No.	DESCRIPTION
10620064	Washer M8.5 x 16 x 2
10621064	Washer M13 x 45 x 5
10624040	Washer M33 x 45 x 1.5
20047220	Scraper Guide,Stainless Reg
20047221	Scraper Guide,Stainless Narrow
653420	Scraper Kit, Narrow-Pair
653436	Scraper Kit, Regular-Pair
HM-61230	Hex bolt M12 x 30
NM-1801	Hex nut M8

***NOTE: Arm #'s 7317.D & G have been replaced with the cast iron arms- #10075099 & 10075100**

CLOSING WHEEL ASSEMBLY

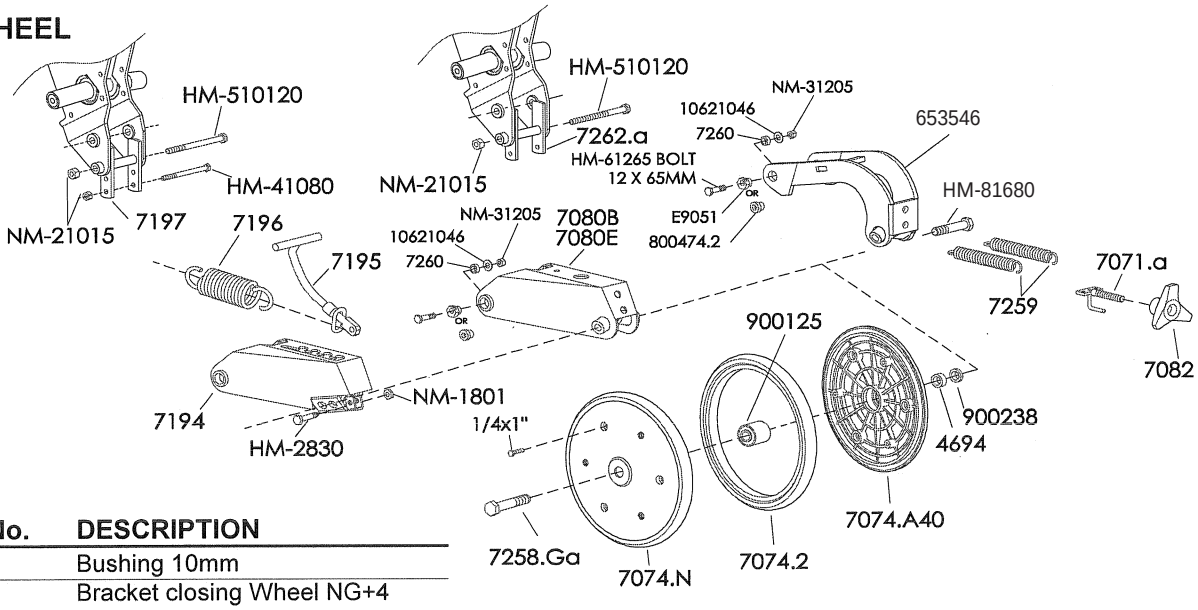

PART No.	DESCRIPTION
4694	Bushing 10mm
653546	Bracket closing Wheel NG+4
7071.A	Adjustment Rod 12mm
7074.A40	Nylon rim half
7074.N	Closing Whl Complete 1" x 12"
7074.2	Tire Only 1" x 12"
7080.B	Bracket adjustable closing wheels
7080.E	Bracket for narrow and twin rows
7082	Handwheel
7194	Bracket for Adj. T-handle
7195	T-handle
7196	Spring
7197	Spring support
HM-81680	M16 x 80 R.H.
7258.GA	M16 x 80 L.H.
7259	Spring
7260	Spacer bushing

PART No.	DESCRIPTION
800474.2	Pivot bushing
7262.A	Spring support
900125	Bearing 40mm
900238	Bushing 8mm
10621046	Washer M13 x 27 x 2
E9051	Eccentric bushing
HM-2830	Hex bolt M8 x 30
HM-41080	Bolt M10 x 80
HM-510120	Bolt M10 x 120
HM-61265	Bolt M12 x 65
NM-1801	Hex nut M8
NM-21015	Nylock 10mm
NM-31205	Nylock 12mm

NG unit press wheels

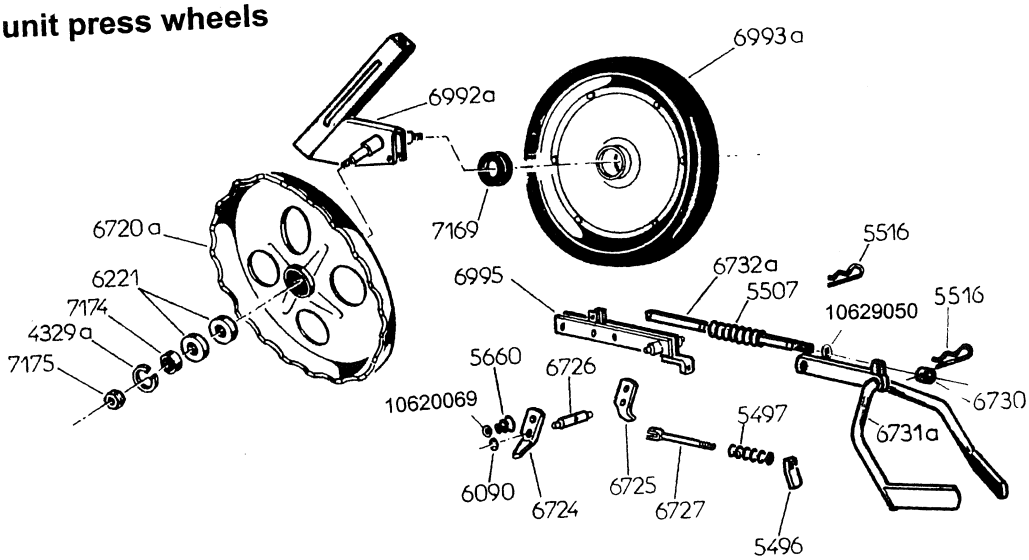

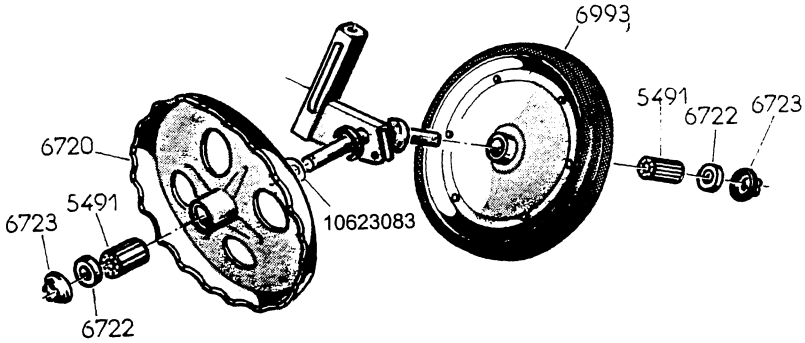

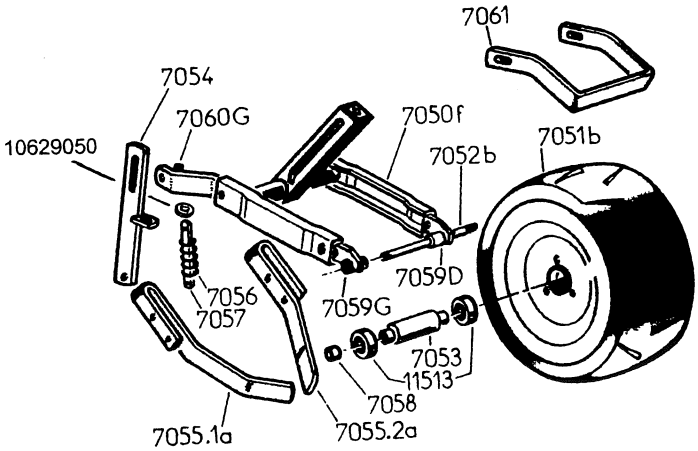

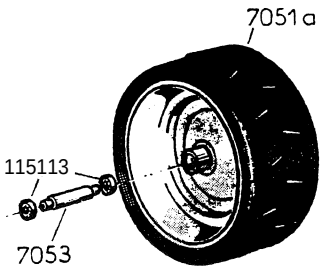

NG unit press wheels

4329.a	Snapring
5491	Bearing (open roller style)
5496	Scraper tightener
5497	Spring
5507	Support spring
5516	Clip pin
5660	Tapered spring
6090	Snapring, 6mm
6221	Bearing, 42mm (60042RS ref. #)
6720	Steel wheel with grease zerk
6720.A	Steel wheel without bearings
6722	Spacer plate
6723	Stop plate
6724	Scraper left
6725	Scraper right
6726	Scraper pin
6727	Tension pin
6730	Bushing for rear hiller
6731.A	Rear hiller
6732.A	Tension pin for hiller
6992.A	Frame for V press wheel
6993	Old style press wheel-DISCONTINUED
6993.A	Press wheel complete
6993.1A	Tire only(2-1/4" x 15-3/4")
7050.F	Bracket for large flat press wheel
7051.A	Old style flat press wheel-DISCONTINUED
7051.B	Flat press wheel complete
7051.1	Tire only(6-1/2" x 14-1/2")
7052.B	Spindle, requires 6x25 roll pin and 16mm jam nuts
NM-51603	16mm jam nut
10172090	Roll pin, 6x25
7053	Sleeve spacer
7054	Hiller support bracket
7055.1A	Hiller left hand
7055.2A	Hiller right hand
7056	Spring
7057	Spring support
7058	Bushing spacer for wheel
7059.D	Spindle mounting bracket, right
7059.G	Spindle mounting bracket, left
7060.D	Hiller mounting bracket, right
7060.G	Hiller mounting bracket, left
7061	Scraper for wheel
7169	Seal for bearing
7175.D	Right hand nut, 16mm
7175.G	Left hand nut, 16mm
11513	Bearing (62042RS ref. #)
10620069	Washer, 8x28x1.5
10629050	Washer with slotted hole

TIRE INFORMATION

TIRE SIZE	USE/DESCRIPTION	TIRE PART #	TUBE # (if needed)	RIM # (size)	RIM W/TIRE MOUNTED	ACTUAL SIZE	PSI REQUIRED
5.00x15	MS-**NO** longer available						
5.0x15	MS-**NO** longer available						
5.90x15	5 x 5 mounted/bidirectional traction grip	G170106152	tubeless	5-3/8x16-1/2"	900015.1	26"x5-1/2"	36
6.5x80x15	MS planters/tractor tread	4870.1	4870.2	4870.3 6x16"		25"x6-1/2"	28
7.00x12	Pull type(older)/smooth	4513.1	tubeless	4513.3 5x13-1/4"		25"x6-1/2"	
7.50x20	Pull type/smooth multi-rib implement (standard)	KD13401	tubeless	KA14413 6-3/4x22"	300456	35"x7"	40
7.60x15	7 x 7mounted/tractor tread	G170227132	tubeless	AW51522V 5-3/4x16-1/2"	900015.2	28"x7"	35
4.10x6	Pull type/contact drive	KD5753	KD5752		KA5090	12"x3"	60
4.10x6	Pull type/contact drive w/modified rim	KD5753	KD5752		300169	12"x3"	60

PART #	DESCRIPTION / APPLICATION	BEARING ID#
	Planter Unit Bearings	
#900125	Bearing, Gauge wheel (#7073.N, nylon) and Closing wheel (#7074.N). Also used in press wheels #11540.AMC and #11540.AM and newer flat press wheel (#900083.A).	DAC1640442RSL
#900092	Bearing, Old flat press wheel (#900083)-**NO LONGER AVAILABLE**	203503
#7081	Bearing, Old Gauge wheel (#7073) and Old Closing wheel (#7074). Has crossdrilled hole for 1/4" roll pin. Use with bushing(#7081.1) as a spacer for gauge wheels.	IB07330SRS
#7081.1	Bushing	
#11513	Bearing, Press wheel #11540.C, #7051.B, #11566 Also used on Monosem's No-till coulters(toolbar and unit mounted).	62042RS
#7014.A	Bearing, Double disc opener (900263) Also, Monosem's double disc fertilizer openers, 7009.1A	52042RS
#7014	Bearing, Double disc opener on OLD PN, PNU, and PBC planters.	5203
#KA2014	Bearing, Double disc fertilizer opener, US system(w/hub KB0134). Disc hiller discs(900262), w/stamped steel hub KD10473.	83B607A
#6221	Bearing, NG+ metering box, adjustable closing wheel(#7074.A).	60042RS
#11579	Main bearing in MS metering box. Bearing on unit drives, that holds safety clutch(#6972.1).	60062RS
	Turbofan Bearings	
#4407	Bearing, Smaller of two bearings on both upper and lower spindles on regular and hi-output turbofans. Also on lower spindle on XHO fans.	62062RS
#4408	Bearing, Larger of two bearings on both upper and lower spindles on regular and hi-output turbofans. Also on lower spindle on XHO fans.	63062RS
#4251	Bearing, Smaller of two bearings on the upper spindle on the Extra Hi-Output turbofan.	62072RS1
#4252	Bearing, Larger of two bearings on the upper spindle on the Extra Hi-Output turbofan.	63072RS1

Frame, Transmission and Wheel Block Bearings

#180039	Bearing, complete -replaces #4515(bearing/flange/hardware)	
#300597	Bearing, 7/8 hex bore - replaces #4515.1	205KRRB2
#300596	Flangette, two piece, three bolt hole - replaces #4515.2	
	.	
#4525	Bearing, Drive wheel on fixed drive wheel blocks.	6007-2RS
#4514	Bearing, complete (#4514.1 and #4514.2).	
#4514.1	Bearing, Supports hex drive shaft passing through fixed drive wheel blocks. Uses pillow block #4514.2 and bushing #4528.	GAY30NPPB
#4655	Bearing, complete (#4655.1 and #4655.2).	
#4655.1	Bearing, Drive wheel on adjustable drive wheel blocks. Uses pillow block #4655.2	S207FF
#4655.2	Pillow block is NO longer available by itself	01LCTE 07
#4655.A	Complete bearing is no longer available	
#4655.1A	Bearing only, Drive wheel on heavy-duty adjustable drive wheel blocks. Uses pillow block #4655.2A.	S208FF
#4655.2A	Pillow block, for above bearing. (01LCTE 08 marking on cast housing).	01LCTE 08
#4659	Bearing, Supports hex drive shaft passing through adj drive wheel block. Hex bore (7/8"). Also supports rear meter box drive shaft on MS version D units.	205KRR2-AG
#KA0895	Bearing(with seal), Drive wheel, on pull-type machines. Uses cup #KR0434(TIMKEN 13621)	13600-LA(TIMKEN)
#P752318	Bearing, Drive wheel, 7x7 mounted machines. Uses cup #P702216 and seal #P602106.	14136A
#KA5116	Bearing, 7/8 hex bore, used on pull type transmissions and (US) dry fertilizer transmissions.	
#KA5624	Bearing, Special extended bearing, used on pull type transmissions and (US) dry fertilizer transmissions.	
#KA2180	Bearing, Hanger type, 7/8 bore, for supporting drive shaft.	Lutco HG-104ZP
#KA9846	Bearing, w/round flange,spot-welded, 7/8 hex bore	

Attachments, Row Marker and Misc. Bearings

#Y2570-594	Bearing, Yetter, residue manager, takes insert #Y2570-715. When sold together it's part #Y2965-127. Seal is part #Y2250-052.	6006RK
#Y2550-027	Bearing, Yetter, fert coulter and no-till coulter. Takes cup #Y2550-029 and seal #Y2550-115.	LM67048
#KA0245	Bearing, US row marker inner bearing cone. Takes cup #KR0150, grease seal #KA0243, and rubber seal #KA0899.	L44643R(TIMKEN)
#KA0257	Bearing, US row marker outer bearing cone. Takes cup #KR0151.	LM11749(TIMKEN)

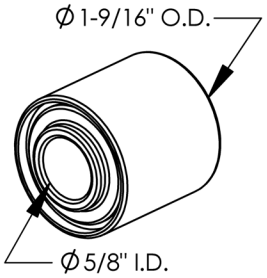

900125

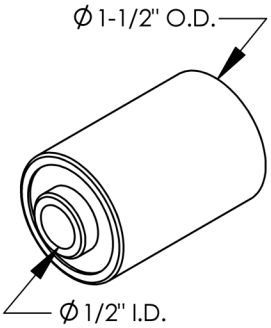

900092

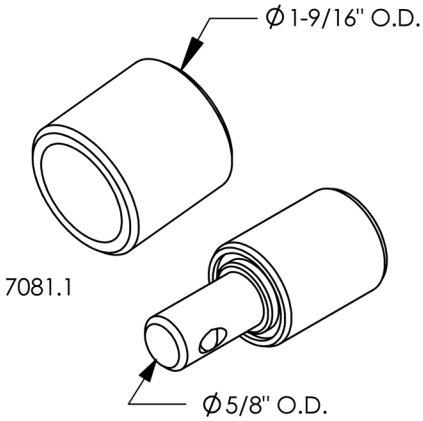

7081

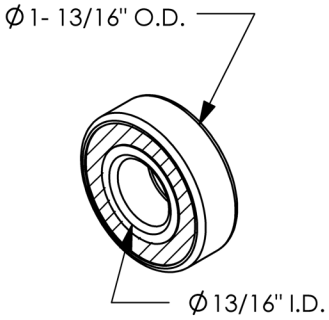

11513

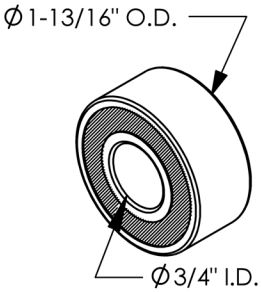

7014.A

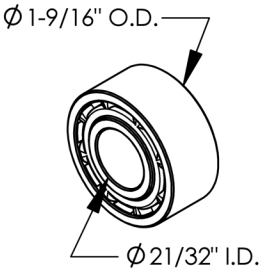

7014

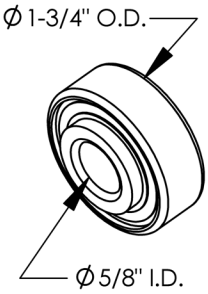

KA2014

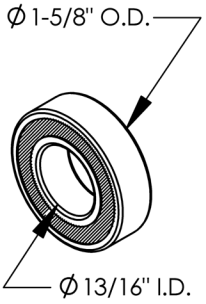

6221

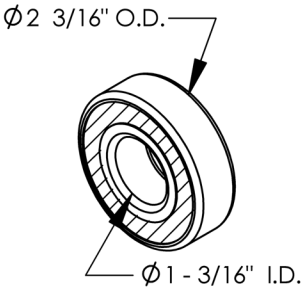

11579

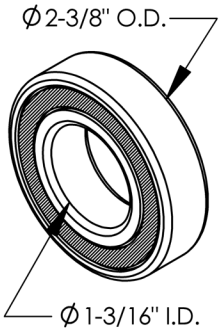

4407

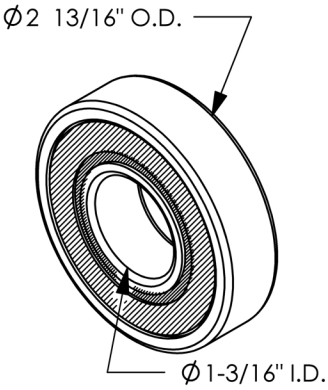

4408

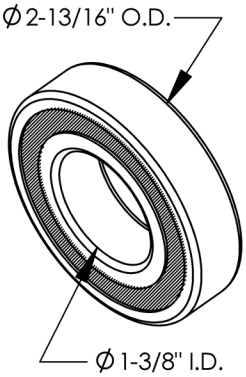

4251

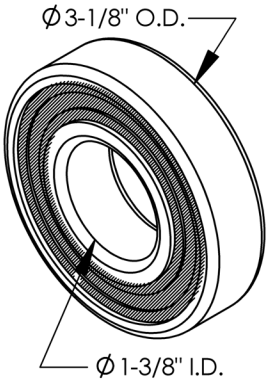

4252

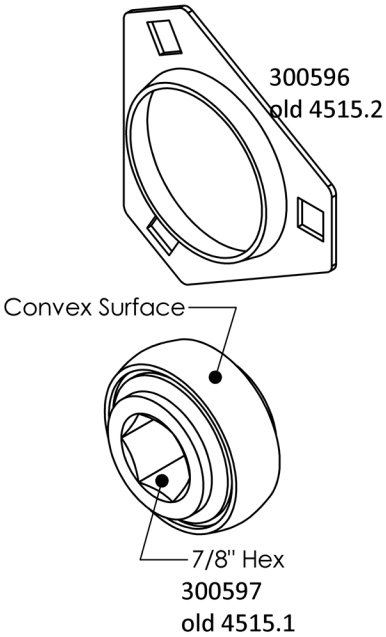
300596
old 4515.2
Convex Surface
7/8" Hex
300597
old 4515.1

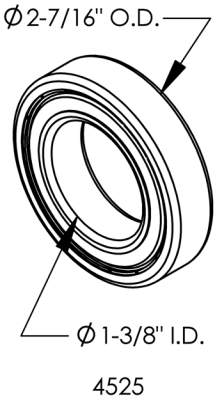
Ø 2-7/16" O.D.
Ø 1-3/8" I.D.
4525

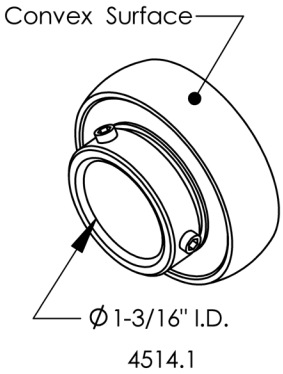
Convex Surface
Ø 1-3/16" I.D.
4514.1

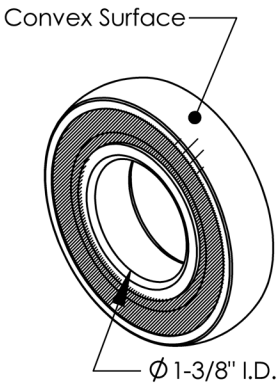
Convex Surface
Ø 1-3/8" I.D.
4655.1

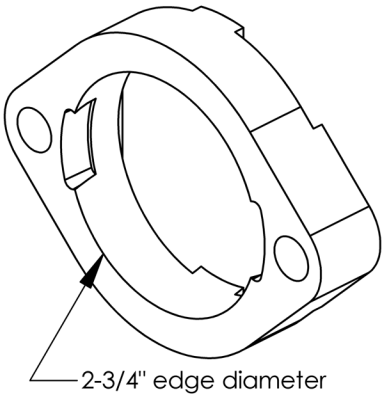
2-3/4" edge diameter
4655.2

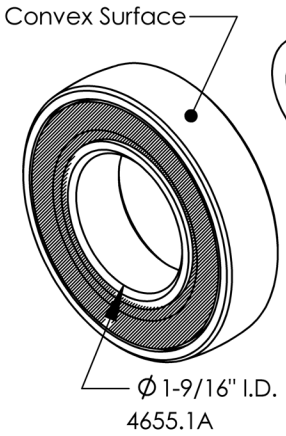
Convex Surface
Ø 1-9/16" I.D.
4655.1A

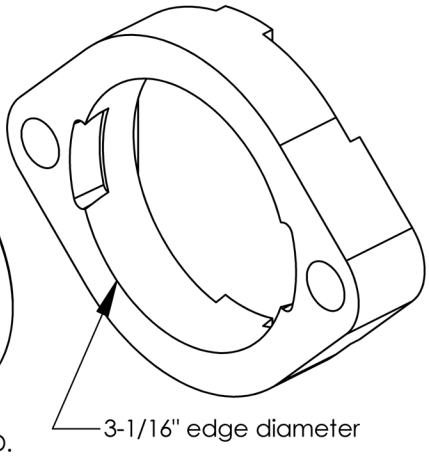
3-1/16" edge diameter
4655.2A

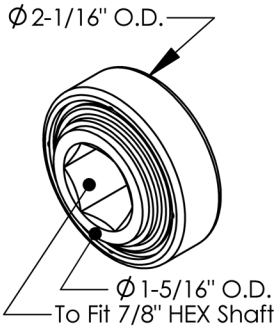
Ø 2-1/16" O.D.
Ø 1-5/16" O.D.
To Fit 7/8" HEX Shaft
4659

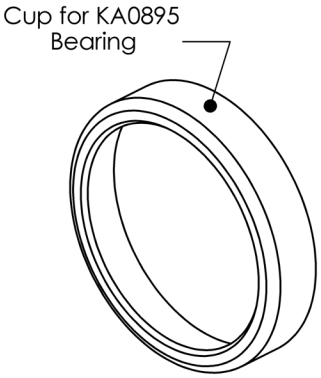
Cup for KA0895
Bearing
KR0434

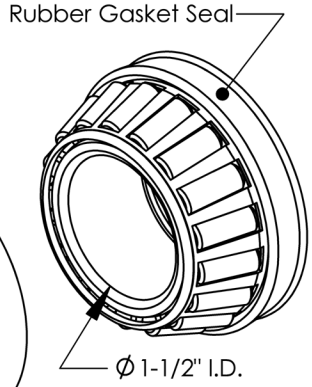
Rubber Gasket Seal
Ø 1-1/2" I.D.
KA0895

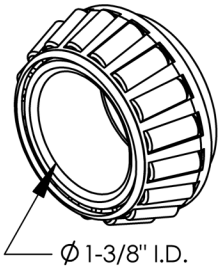
Ø 1-3/8" I.D.
P752318

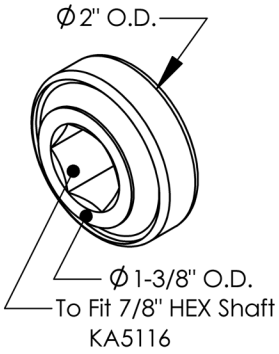

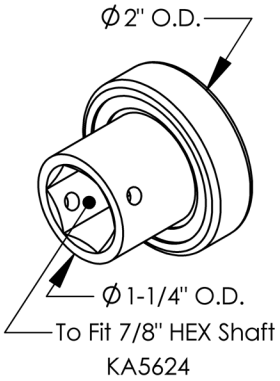

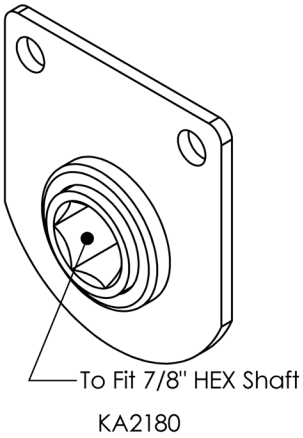

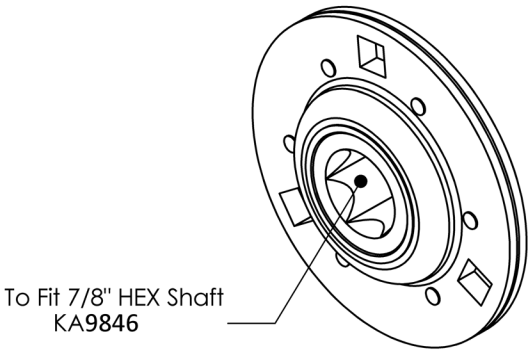

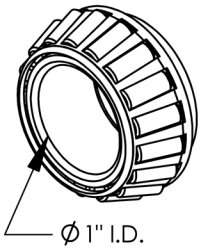

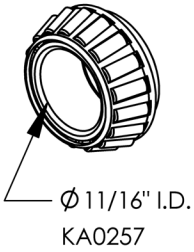

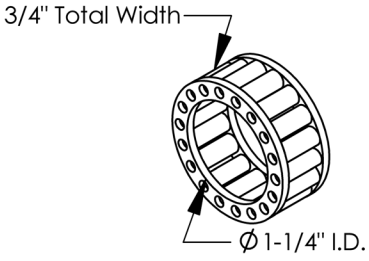

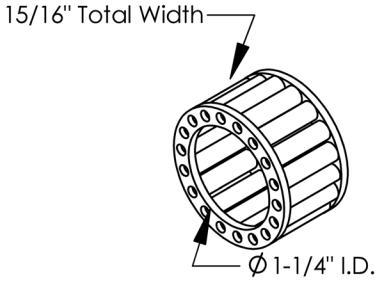

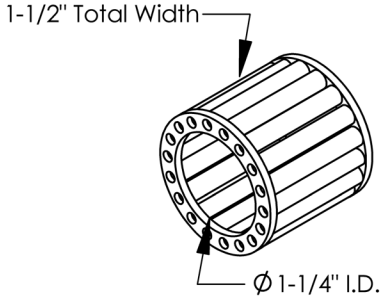

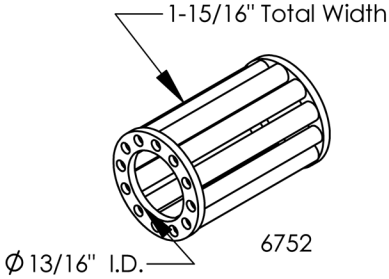

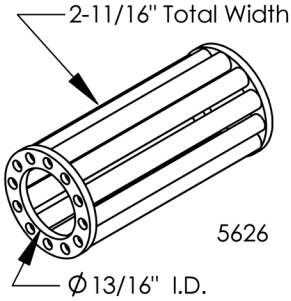

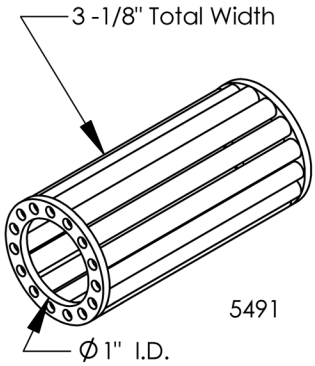

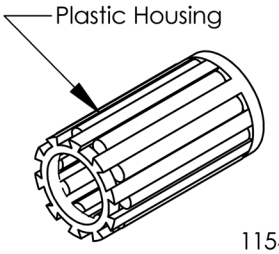

Plastic or metal housing
13/16"ID
2-1/8" long

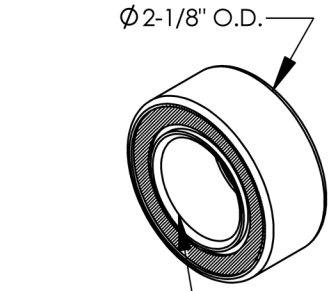

Y2570-594

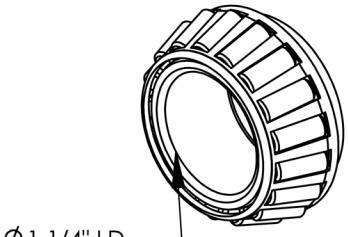

Y2550-027

ROLLER CHAIN INFORMATION

PART #	SIZE	LENGTH *	APPLICATION	INCHES	FEET
		# LINKS			
4920	5R	100	MS, transmission on wheel block	50	4' 4"
6518	5R	120	MS unit drive chain	60	5'
6568/now 5650.A	5R	68	MS version D rear unit drive chain	34	2' 10"
6974	5R	90	MS version E unit drive chain	45	3' 9"
7114	5R	124	NG+ unit drive chain	62	5' 2"
7158	5R	70	NG unit side chain	35	2' 11"
7185.A	5R	88	NG unit main drive chain	44	3' 8"
7433	5R	153	NC unit main drive chain	76.5	6' 4-1/2"
9172.B	5R	108	Fertilizer drive/transmission chain	54	4' 6"
9553.B	5R	110	Microsem drive/transmission chain	55	4' 7"
9553.E	5R	103	Microsem drive/twin row, upper chain	51.5	4' 3-1/4"
9553.F	5R	60	Microsem drive/twin row, lower chain	30	2' 6"
9609.B	5R	128	Lower herbicide drive chain	64	5' 4"
9609.C	5R	164	Upper herbicide drive chain	82	6' 10"
4307.B	13N	52	Fixed wheel block drive chain, 5 x 5 toolbars	39	3' 3"
4327.AS	13N	36	Gearbox/transmission chain, 5 x 5 toolbars	27	2' 3"
4657	13N	76	Heavy duty adjustable drive wheel block, 5 x 5 toolbars	57	4' 9"
4657.A	13N	66	Standard adjustable drive wheel block, 5 x 5 toolbars	49.5	4' 1-1/2"
4903	13N	56	MS standard wheel block drive chain	42	3' 6"
K3303-114	#41	120	US insecticide drive chain	60	5'
900259	#41	124	Unit drive chain	62	5' 2"
7114.TR	#41	118	NG+ unit drive chain, TWIN ROW, w/timing system	59	4'11"
K3310-80	#40	80	Transmission chain, pull type, 4 thru 12 rows	40	3' 4"
K3310-98	#40	98	US fertilizer drive chain	49	4' 1"
K3310-132	#40	132	Contact drive wheel chain, pull types	66	5' 6"
900184.B	#40	57	Twin row drive chain(55 links,1 offset,1 conn. Link)	28.5	2' 3-1/4"
900327	#40	90	Twin row, 7.5", drive chain(89 links, 1 conn. Link)	45	3' 9"
4791.A	#50	130	Adjustable wheel block drive chain, 7 x 7 toolbars	81.25	6' 8"
4795.A	#50	72	Transmission chain, 7 x 7 toolbars	45	3' 9"

*all lengths include a connecting link

BULK CHAIN INFORMATION

10107	5R	sold by the foot or by the roll (10' & 25')
10107.1	5R	10 ft. roll
10107.2	5R	25 ft. roll
10111	5R	connector link, sold individually
10115	5R	offset link, sold individually
10108.1	13N	10 ft. roll
10112	13N	connector link, sold individually
10116	13N	offset link, sold individually

U-BOLTS

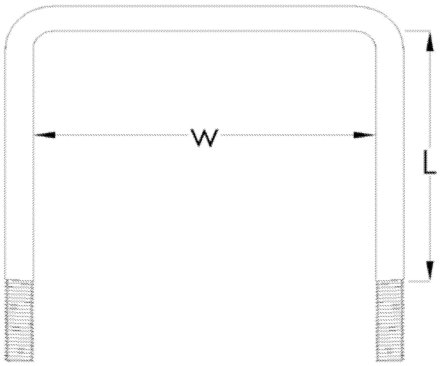

Part #	W x L
900164	U Bolt 7 x 3, 5/8-11
900317	U Bolt 7 x 3, 3/4-10
900240	U Bolt 7 x 5, 3/8-16
900198	U Bolt 7 x 5, 5/8-11
900200	U Bolt 7 x 5, 3/4-10
4647.S	U Bolt 7 x 7, 3/8-16
4502.S	U Bolt 7 x 7, 5/8-11
4502.SA	U Bolt 7 x 7, 3/4-10
4647.SS	U Bolt 5 x 5, 3/8-16
4502.SS	U Bolt 5 x 5, 5/8-11
4502	U Bolt 5 x 5, 16mm
4504.1	U Bolt 5 x 5, 20mm
900239	U Bolt 5 x 7, 3/8-16
900222	U Bolt 5 x 7, 5/8-11
KD2721	U Bolt 2 x 2, 1/2-13
KD1138	U Bolt 2.5 x 2.5, 1/2-13
KD13287	U Bolt 2.5 x 1.5, 1/2-13
4501	V Bolt 5 x 5, 16mm
4501.SA	V Bolt 5 x 5, 5/8-11
4501.S	V Bolt 7 x 7, 5/8-11
900237	Z Bent Stud 5/8-11 x 10
900347	Z Bent Stud 3/4-10 x 10 YZ
	Nylon locknuts
N-2101	3/8-16 yellow zinc pl., Gr. 8
N-4101	1/2-13 yellow zinc pl., Gr. 8
N-5101	5/8-11 yellow zinc pl., Gr. 8
N-6101	3/4-10 yellow zinc pl., Gr. 8
NM-51605	16MM yellow zinc pl., Gr. 8
NM-72005	20MM yellow zinc pl., Gr. 8

BULK HOSE INFORMATION

Part #	Description
P110CL-1	1" Clear Kanaflex hose
P112CL-1.25	1-1/4" Clear Kanaflex hose
P150CL-3	3" Clear Kanaflex hose
P630ED-4	4"Black Kanaflex hose
P630ED-6	6" Black Kanaflex hose
H02Z-1PV-6	6" Black collapsible hose
4416	35mm ID for MS
4454	100 ft. of 4454 hose, 40mm ID for NG+
4454.50	50 ft. of 4454 hose, 40mm ID for NG+

METERING BOX

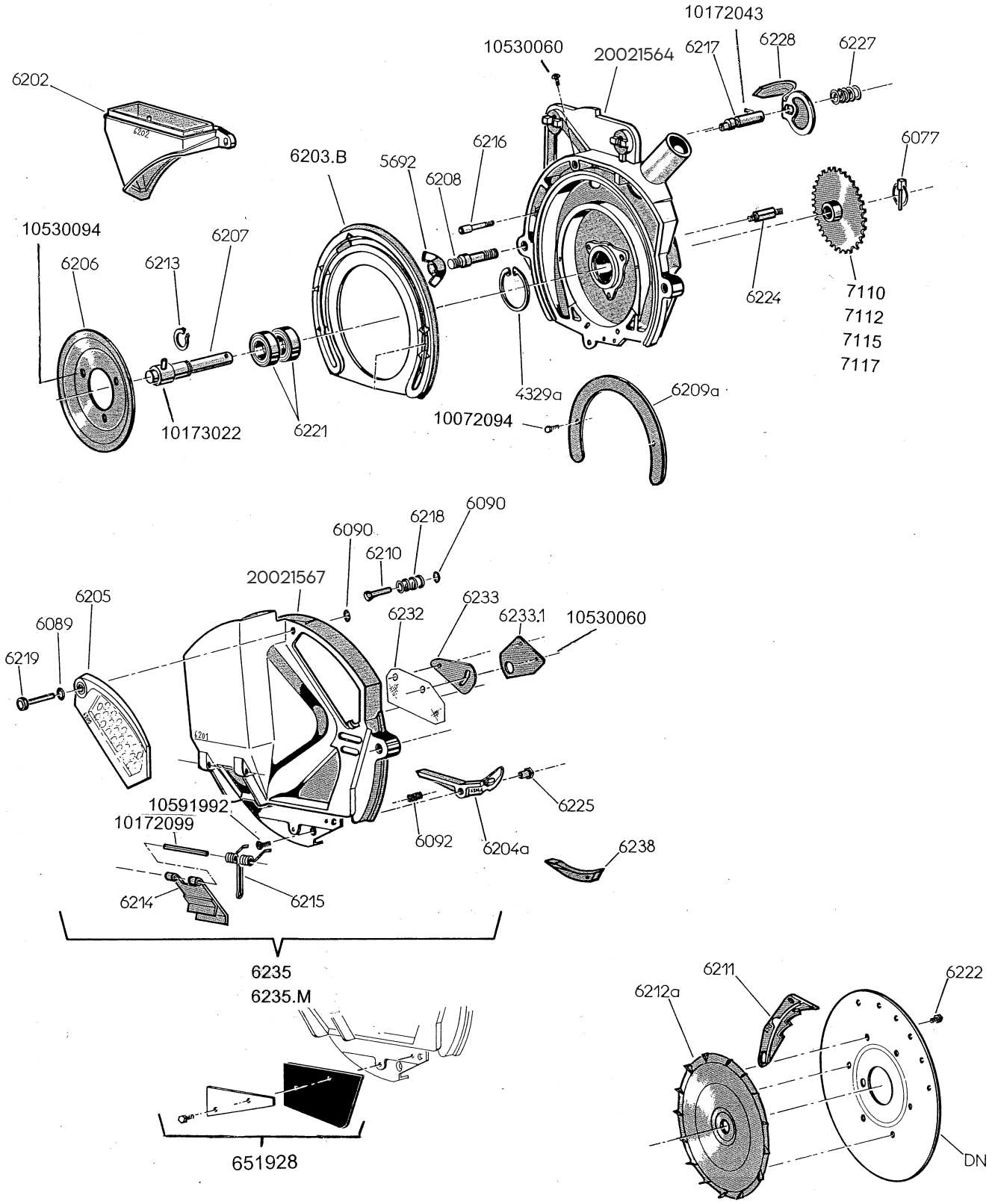

Part No.	DESCRIPTION
4329.A	Snapring, internal (57mm)
5692	Wing nut (10mm)]
6077	Lyncn pin, 6mm dia.
6089	Rubber ring
6090	Snapring (6mm)
6092	Spring
20021564	Housing only, for meter box
20021567	Cover only
6202	Collar brace
6203.B	Plastic insert (for disc to run against)
6204.A	Bronze ejector block
6204.ACO	Bronze ejector block assembly, complete with spring, screw(6x16) and nut
10591992	Countersunk sockethead screw, 6x16
6205	Control window
6206	Hold down plate (to secure 6203.B)
10530094	Bolt, phillips head 6x20 (to secure 6206)
6207	Shaft, meter box (requires 8x50 roll pin)
10173022	Roll pin, 8x50
6208	Threaded tightening rod for cover
6209.A	Brace for plastic insert (6203.a)
10072094	Screw, 5x6 (to secure brace 6209.a)
6210	Pressure pin scraper
6211	Seed scraper, standard
6211.2A	Seed scraper, peanut
6212.A	Agitator, brass
6213	Snapring, external(20mm)
6214	Trap door (for seed clean out)
6215	Spring (for trap door)
10172099	Roll pin, 6x70 (to secure trap door)
651928	Windshield assembly, complete
65032072	Complete meter box w/26T sprocket (NG+)

Part No.	DESCRIPTION
6216	Fixed pin for seed scraper
6217	Adjustable pin for seed scraper (requires 4x35 roll pin)
10172043	Roll pin, 4x35
10530060	Bolt, phillips head 5x10 (to secure6217)
6218	Spring
6219	Pin for control window
6221	Bearing 42mm (60042RS ref. #)
6222	Bolt, 5x6 (to secure agitator 6212.a)
6225	Nut (to secure ejector block, 6204.a)
6227	Spring (for selector handle)
6228	Selector handle
6232	Gasket for seed flow gate

See page 3-3 for sizes of seed flow gates (6233…)

Gates 6233, 6233.1 & 6233.2 are for the standard cover.

6233	Standard gate
6233.1	Gate (for very small seed)
6233.2	Gate (for medium to small seed)

Gates 6233.2S & 6233.3S are for the peanut cover.

6233.2s	Gate (for small seed)
6233.3s	Gate (for medium seed)
10530060	Bolt, 5x10 to secure seed flow gates
6235	Standard cover, complete
6235.m	Peanut cover, complete(will accept either ejector block 6204.a or 6238)
6238	Aluminum ejector block (for peanut covers)

Sprockets below are for drive chain #7114 (metric 5R).

7110	Sprocket, 27 tooth (4% slow down from standard sprocket #7115)
7112	Sprocket, 21 tooth (20% speed up from standard sprocket #7115)
7115	Sprocket, 26 tooth (standard sprocket)
7117	Double sprocket, 26-12 (to drive US insecticide)

When using HD no till linkage, refer to page 1-16A, item #34 (7110.S - 27T / #41 chain)

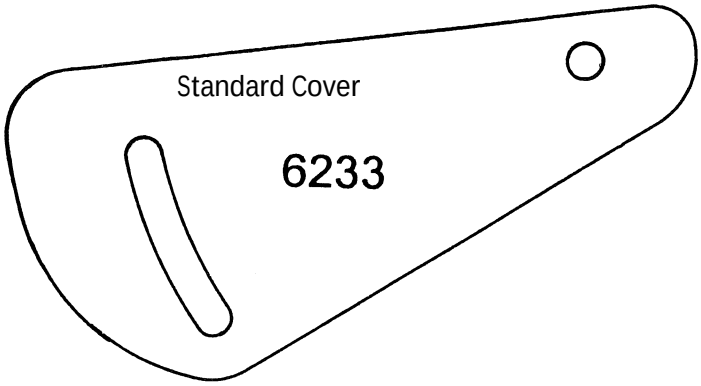

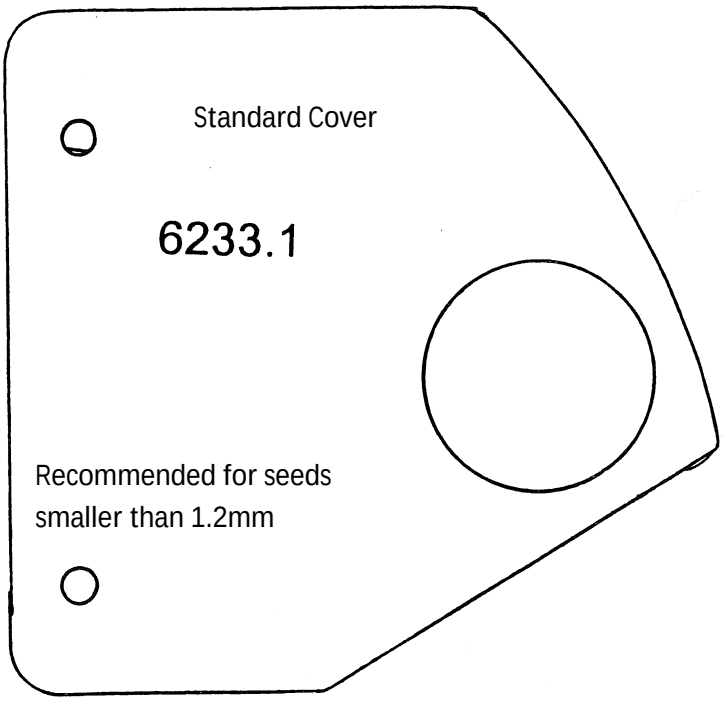

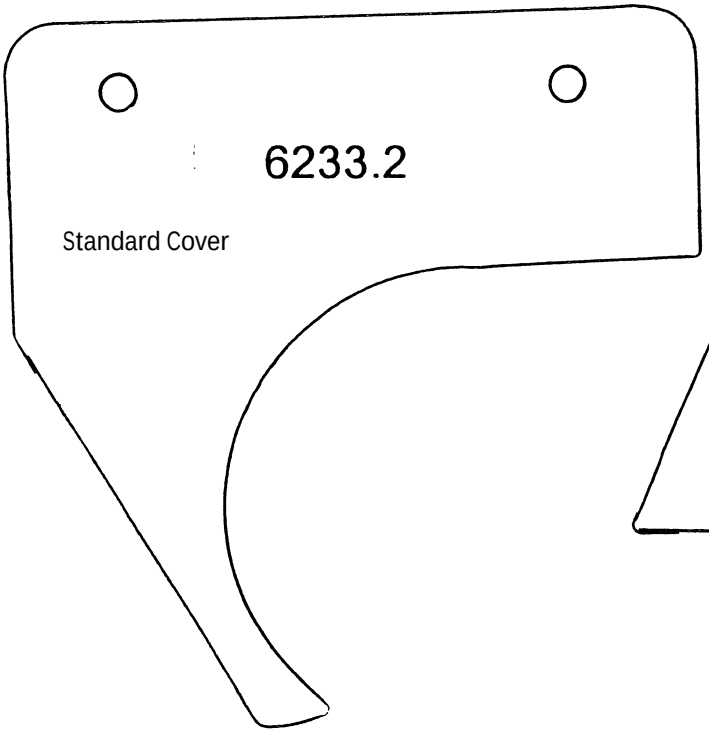

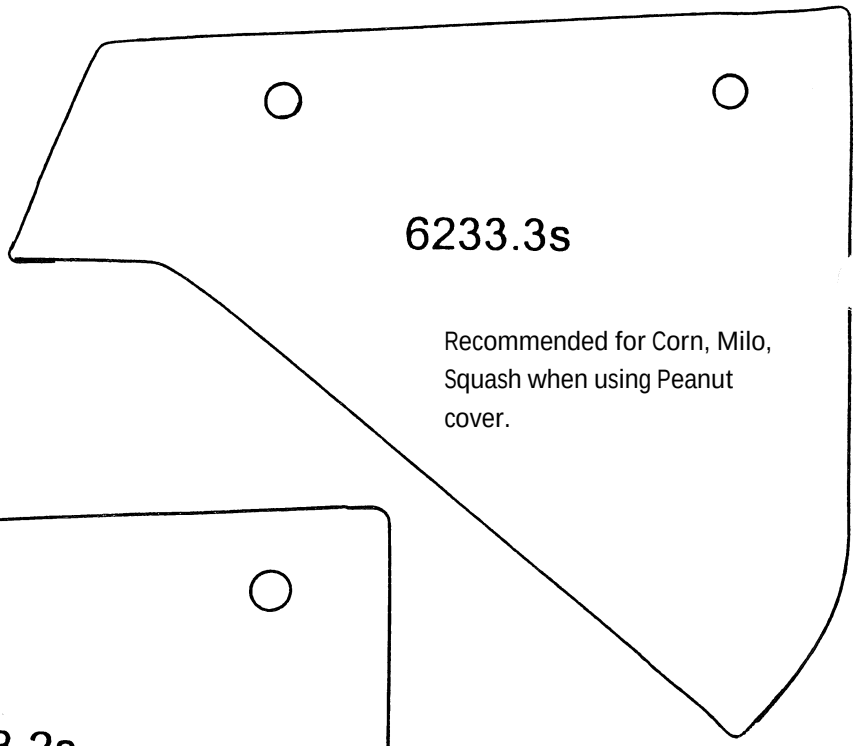

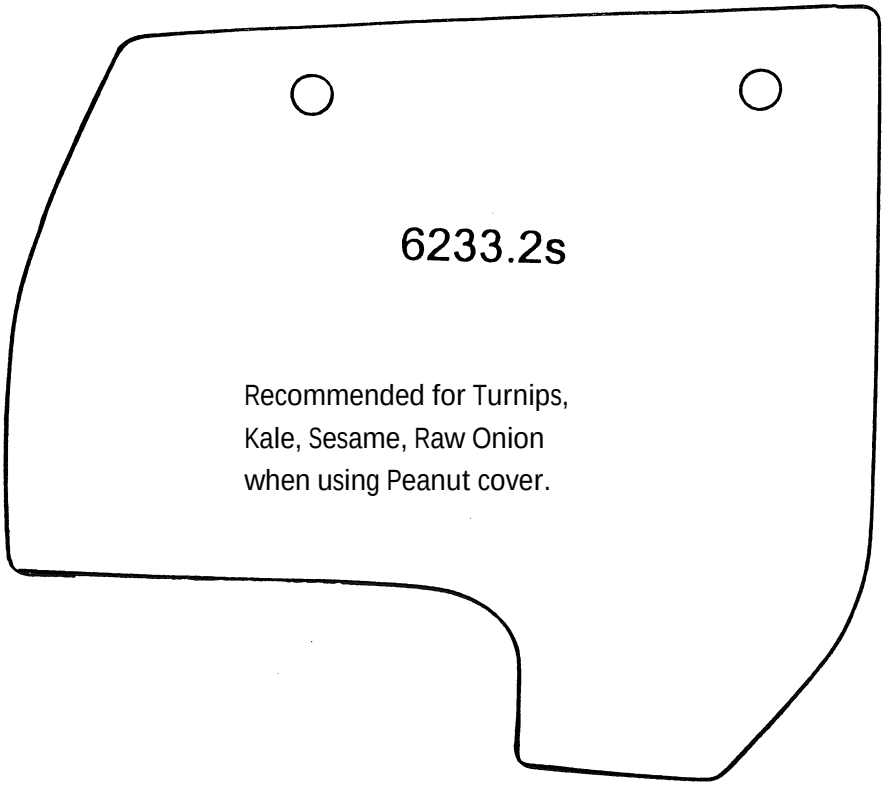

Seed flow gates to restrict the flow of seed into the meter

SEED DISC IDENTIFICATION

DN 2450

INDICATES THE SIZE (DIA.) OF THE HOLES

INDICATES THE NUMBER OF HOLES IN SEED DISC

HOLE SIZE EXAMPLES

06 = .6MM
08 = .8MM
10 = 1MM
12 = 1.2MM
20 = 2MM
35 = 3.5MM
45 = 4.5MM
50 = 5MM
60 = 6MM
65 = 6.5MM

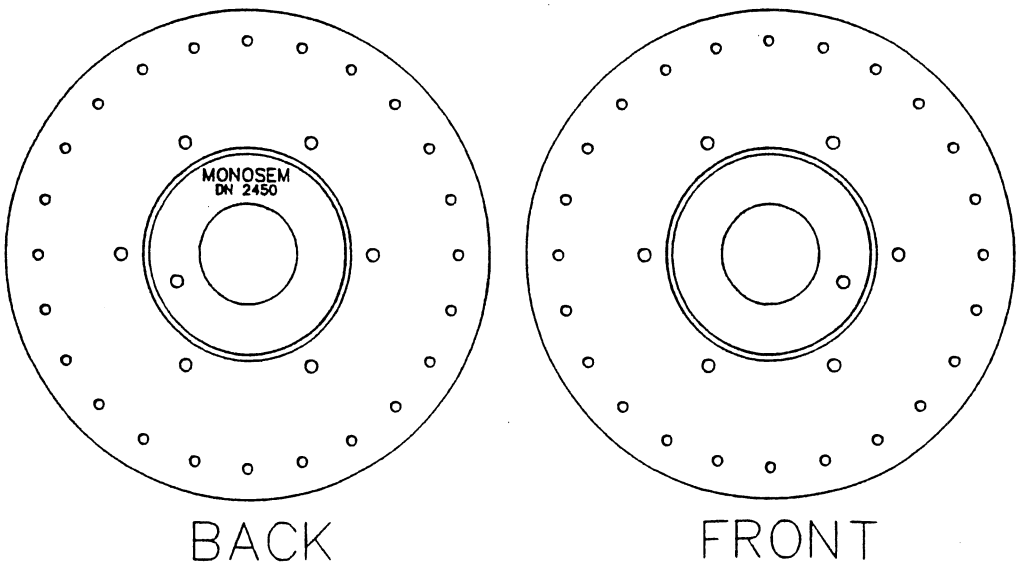

When ordering seed discs, DN is the disc only. DC is the disc complete with the brass agitator, part #6212.a.

NG+ SEED DISC RECOMMENDATIONS

CROP	SEED DISC	DESCRIPTION	SEED SPACING
Beans	DN3665	Large, Kidney	2-3/8 - 7"
	DN4850*	Large, Pinto, Romano, Lima, Chickpea	1-3/4 - 5-1/2"
	DN6035*	Small, Navy, Peas	1-3/8 - 4-3/8"
	DN6045*	Medium, Snap, Baby Limas, Soybeans	1-3/8 - 4-3/8"
Broccoli and Cabbage	DN3612 (low population)		2-3/8 - 7"
	DN7212 (high population)		1-3/16 - 3-1/2"
Canola	DN7212		1-3/16 - 3-1/2"
Cauliflower	DN3612 (low population)		2-3/8 - 7"
	DN7212 (high population)		1-3/16 - 3-1/2"
Collard Greens	DN7208		1-3/16 - 3-1/2"
Corn	DN0905	Field	9-1/2 - 28"
	DN1250		7 - 21"
	DN1850* (low population)		4-3/4 - 14"
	DN2450* (medium population)		3-1/2 - 10-1/2"
	DN3050* (high population)		2-3/4 - 8-1/2"
	DN2437, small, 2700-5000 seeds/lb	Sweet	3-1/2 - 10-1/2"
	DN2445, large, 1700-2700 seeds/lb		3-1/2 - 10-1/2"
	DN2425	Ornamental	3-1/2 - 10-1/2"
Cotton	DN3635* (low population)	Single seed drop	2-3/8 - 7"
	DN6035 (high population)	Single seed drop	1-3/8 - 4-3/8"
	DN0930D (double seed drop)	Hill drop(seeds 3/4 - 2" apart)	9-1/2 - 28"
	DN0930T (triple seed drop)	Hill drop(seeds 3/4 - 2" apart)	9-1/2 - 28"
	DN1230D (double seed drop)	Hill drop(seeds 3/4 - 2" apart)	7-1/8 - 21"
	DN1230T (triple seed drop)	Hill drop(seeds 3/4 - 2" apart)	7-1/8 - 21"
	DN1830D (double seed drop)	Hill drop(seeds 3/4 - 2" apart)	4-3/4 - 14"
	DN1830T (triple seed drop)	Hill drop(seeds 3/4 - 2" apart)	4-3/4 - 14"
Cucumbers/ Pickles	DN1820	Hand harvest	4-3/4 - 14"
	DN3020	Machine harvest	2-3/4 - 8-1/2"
Kale	DN7208		1-3/16 - 3-1/2"
Melons	DN0620* (low population)	Watermelon, large seed	28-1/2 - 84"
	DN0920 (medium population)		9-1/2 - 28"
	DN1820 (high population)		4-3/4 - 14"
	DN0325(low population)	Watermelon, large seed	28-1/2 - 84"
	DN0325D (hill drop)	Drop two seeds, 1-3/8 -4-3/8" apart	28-1/2 - 84"
	DN0625 (medium population)		14-1/4 - 42"
	DN062D (hill drop)	Drop two seeds, 1-3/8 -4-3/8" apart	14-1/4 - 42"
	DN0925 (high population)		9-1/2 - 28"
Okra, Artichoke	DN3622*		2-3/8 - 7"
	DN7222*		1-3/16 - 3-1/2"

* These discs are also stocked as complete discs w/ agitator use part#: DC####
DN= Stainless Steel Seed Disc back DC= Seed Disc back and Agitator
All discs may be ordered as complete discs but they are subject to some added lead time

NG+ SEED DISC RECOMMENDATIONS

CROP	SEED DISC	DESCRIPTION	SEED SPACING
Onions	DN3610 (low population)	Raw	2-3/8 - 7"
	DN7210 (high population)		1-3/16 - 3-1/2"
	DN3622* (low population)	Pelleted	2-3/8 - 7"
	DN7222* (high population)		1-3/16 - 3-1/2"
Parsley	DN7208		1-3/16 - 3-1/2"
Peanuts	DN3665	Jumbo Seed	2-3/8 - 7"
	DN3060* (twin row)	Small to medium seed	2-3/4 - 8-1/2"
	DN4060	Small to medium seed	2-1/8 - 6-1/2"
	DN4860 (not recommended)	Small to medium seed, (High pop)	1-3/4 - 5-1/2"
Peppers	DN3612 (low population)		2-3/8 - 7"
	DN7212 (high population)		1-3/16 - 3-1/2"
Pumpkins	DN0335 (low population)		28-1/2 - 84"
	DN0335D (hill drop)	Drop two seeds, 1-3/8 - 4-3/8" apart	28-1/2 - 84"
	DN0635 (medium populaton)		14-1/4 - 42"
	DN0635D (hill drop)	Drop two seeds, 1-3/8 - 4-3/8" apart	14-1/4 - 42"
	DN0935 (high population)		9-1/2 - 28"
Radish	DN6015		1-3/8 - 4-3/8"
Rice	DN9016		15/16 - 2-3/4"
Sesame	DN7208		1-3/16 - 3-1/2"
Sorghum	DN3622* (low population)		2-3/8 - 7"
	DN7222 (high population)		1-3/16 - 3-1/2"
Spinach	DN6015	Small seed	1-3/8 - 4-3/8"
	DN6020	Large seed	1-3/8 - 4-3/8"
	DN12020	Large seed (high population)	11/16 - 2-1/16"
Squash	DN0625 (medium population)	Summer	14-1/4 -42"
	DN0925 (high population)		9-1/2 - 28"
	DN0635 (medium population)	Winter	14-1/4 - 42"
	DN0935 (high population)		9-1/2 -28"
Sugarbeets	DN4020* (medium population)	Medium, Large & Pelleted seed	2-1/8 - 6-1/2"
	DN4025* (medium population)	Large and Pelleted seed	2-1/8 - 6-1/2"
	DN6020 (high population)	Medium, Large & Pelleted seed	1-3/8 - 4-3/8"
	DN12015 (seed production)	Medium, Large & Pelleted seed	11/16 - 2-1/16"
	DN12020 (seed production)	Small, Medium, Large & Pelleted seed	11/16 - 2-1/16"
Sunflowers	DN1225 (low population)	Oil & Confection	7-1/8 - 21"
	DN1825* (high population)		4-3/4 - 14"
Tomatoes	DN7212		1-3/16 - 3-1/2"
	DN1212T (hill drop 12 x 3 x 1.2)		7-21"
Turnips	DN7208		1-3/16 - 3-1/2"

* These discs are also stocked as complete discs w/ agitator use part#: DC####
DN= Stainless Steel Seed Disc back DC= Seed Disc back and Agitator
All discs may be ordered as complete discs but they are subject to some added lead time

Dimensions of seed hoppers

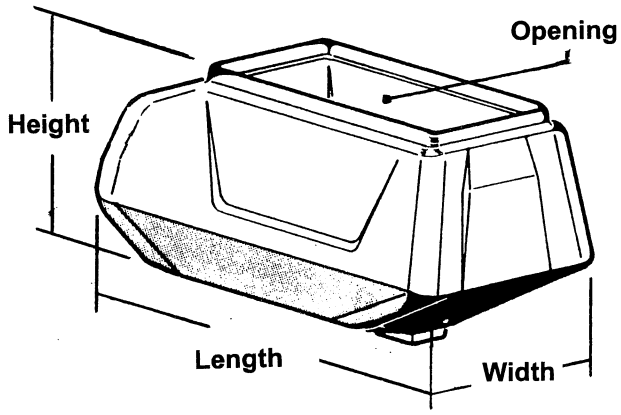

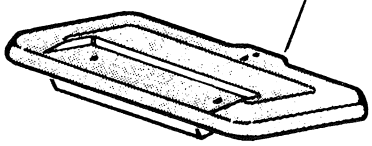

7077.A
7077.UNR
7077.LRG

NG+/NG+2 UNIT HOPPERS

Part #	Capacity	Dimensions
7077.A	45 liter (1.25 bushels)	12-1/2" wide x 23-1/2" long x 13" tall with an 8" x 15" opening
7077.UNR	50 liter (1.4 bushels)	8-1/2" wide x 30" long x 17" tall with a 5" x 15" opening
7077.LRG	60 liter (1.7 bushels)	12-1/2" wide x 24" long x 17" tall with an 8" x 15" opening

NG UNIT HOPPERS

Part #	Capacity	Dimensions
7164	25 liter (.7 bushels)	9" wide x 20" long x 12" tall with a 5" x 15" opening
7164.1	33 liter (.9 bushels)	9" wide x 20" long x 15-1/4" tall with a 5" x 15" opening

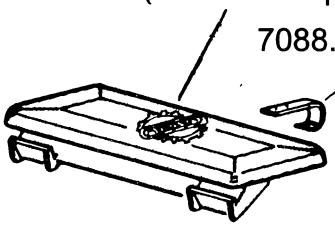

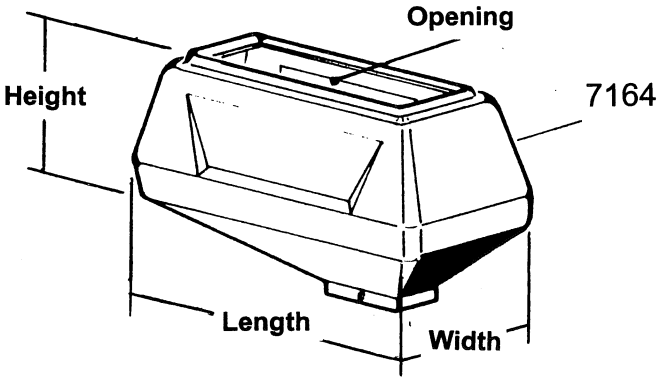

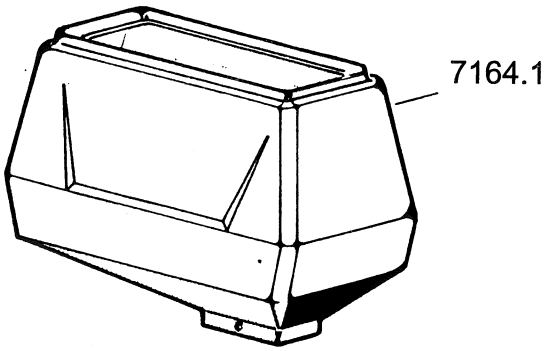

Dimensions of seed hoppers

NG+/NG+2/NG+3 UNIT HOPPERS

Part #	Capacity	Dimensions	Notes
7077.A	45 liter (1.25 bushels)	12-1/2" wide x 24" long x 13" tall with an 8" x 15" opening	DISCONTINUED
7077.UNR	50 liter (1.4 bushels)	8-1/2" wide x 30" long x 17" tall with a 5" x 15" opening	NG+ sticker
7077.LRG	60 liter (1.7 bushels)	12-1/2" wide x 24" long x 17" tall with an 8" x 15" opening	replaced with 7077.2
7077.2	60 liter (1.7 bushels)	12-1/2" wide x 24" long x 17" tall with an 8" x 15" opening	NG+2 sticker standard
7077.2A	60 liter (1.7 bushels)	12-1/2" wide x 24" long x 17" tall with an 8" x 15" opening	DISCONTINUED see 7077.3A
7077.3	60 liter (1.7 bushels)	12-1/2" wide x 24" long x 17" tall with an 8" x 15" opening	Twin row sticker standard
7077.3A	60 liter (1.7 bushels)	12-1/2" wide x 24" long x 17" tall with an 8" x 15" opening	Twin row sticker reversed for twin row
7077.3F	16 liter (.45 bushels)	9" wide x 19-1/2" long x 9-3/4" tall with a 5" x 15" opening	NG+3 sticker
7077.4	3 bushel	12-1/2" wide x 30" long x 20" tall with an 8" x 15" opening	NG+3 sticker
7300	52 liter (1.5 bushels)	12" wide x 27" long x 15" tall with an 8" x 15" opening	NG+3 sticker
NG/NC UNIT HOPPERS			
7164	25 liter (.7 bushels)	9" wide x 20" long x 12" tall with a 5" x 15" opening	NG unit
7164.1	33 liter (.9 bushels)	9" wide x 20" long x 15-1/4" tall with a 5" x 15" opening	NG unit
7443	39 liter (1.1 bushels)	9" wide x 23" x 17-1/2" tall with a 5" x 15" opening	NC unit

The outlet on 7077.3 & 7077.3A has been offset a 1/4" more than the standard hopper.

E1020	Hopper turnaround bracket, front	Needed when hopper #7077.3A is used and is turned around or "reversed".
800501	Hopper turnaround bracket, rear	

Sizes of different hopper lids

Part #	Application	Size in inches
7104.CO	large hoppers - 60ltr. and 3 bu. large Microsem hopper (9502.2)	17 x 9-3/4
7088.N also 7088	33 and 25 Ltr seed hoppers Microsem hopper (9502.C & 9502.1A)	16-3/4 x 6-3/4
7088.A	small Microsem hopper (9502.D) new in '03	12-3/8 x 6-3/4
KD7126	Kinze US insect. hopper	19 x 15-1/4
7508.1	NC seed hopper lid (7443, plastic)	16-1/2 x 7

Twin Row Hopper Turnaround Assembly

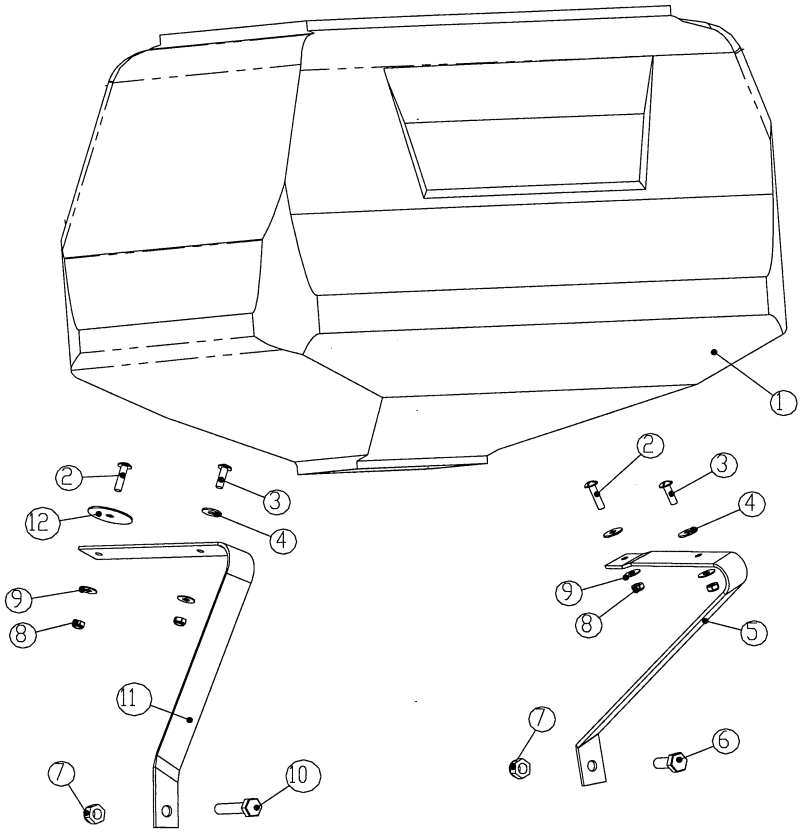

ITEM	PART No.	DESCRIPTION
1	7077.3A	Reversed hopper (60 ltr)
2	10530096	Screw M6 x 25 phillips head
3	10530094	Screw M6 x 20 phillips head
4	W-9618	Washer, 6.5 x 18 x 1.5mm
5	E1020	Front hopper bracket
6	HM-41025	Bolt M10 x 25
7	NM-21015	Nylock 10mm
8	NM-0605	Nylock 6mm
9	10620041	Washer, 6.5 x 18 x 1.5mm
10	HM-41045	Bolt M10 x 45
11	800501	Rear hopper bracket
12	W-0415	Washer, 7 x 41 x 1 SS

3 Bushel Hopper Assembly

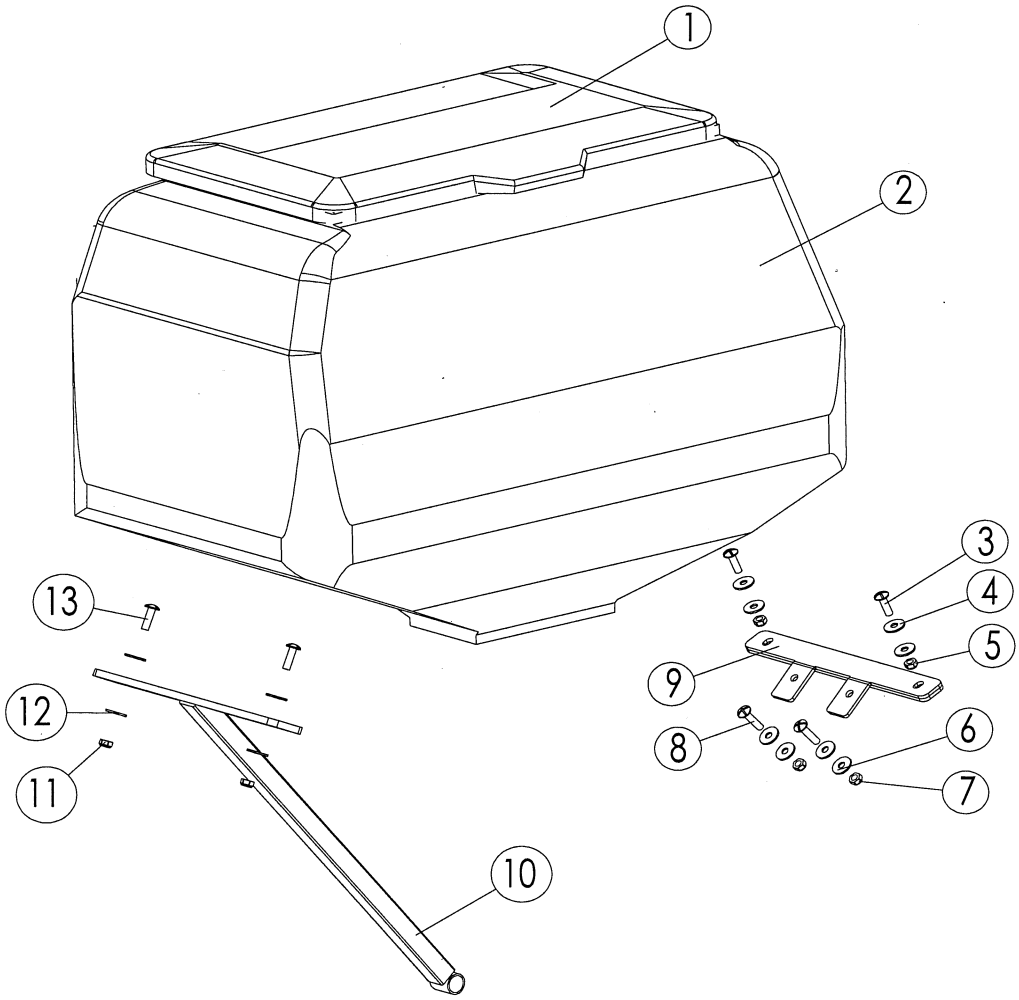

ITEM	PART No.	DESCRIPTION
1	7104.CO	Lid with spring clip
2	7077.4	3 Bushel hopper
3	10530094	Phillips head screw, 6 x 20
4	W-9618	Flat washer, 6.5 x 18 x 1.5
5	NM-0605	Nylon locknut, 6mm
6	W-9618	Flat washer, 6.5 x 18 x 1.5
7	NM-0605	Nylon locknut, 6mm
8	10530096	Phillips head screw, 6 x 25
9	900384	Front hopper brace
10	900383	Rear hopper brace
11	NM-0605	Nylon locknut, 6mm
12	W-9618	Flat washer, 6.5 x 18 x 1.5
13	10530094	Phillips head screw, 6 x 20

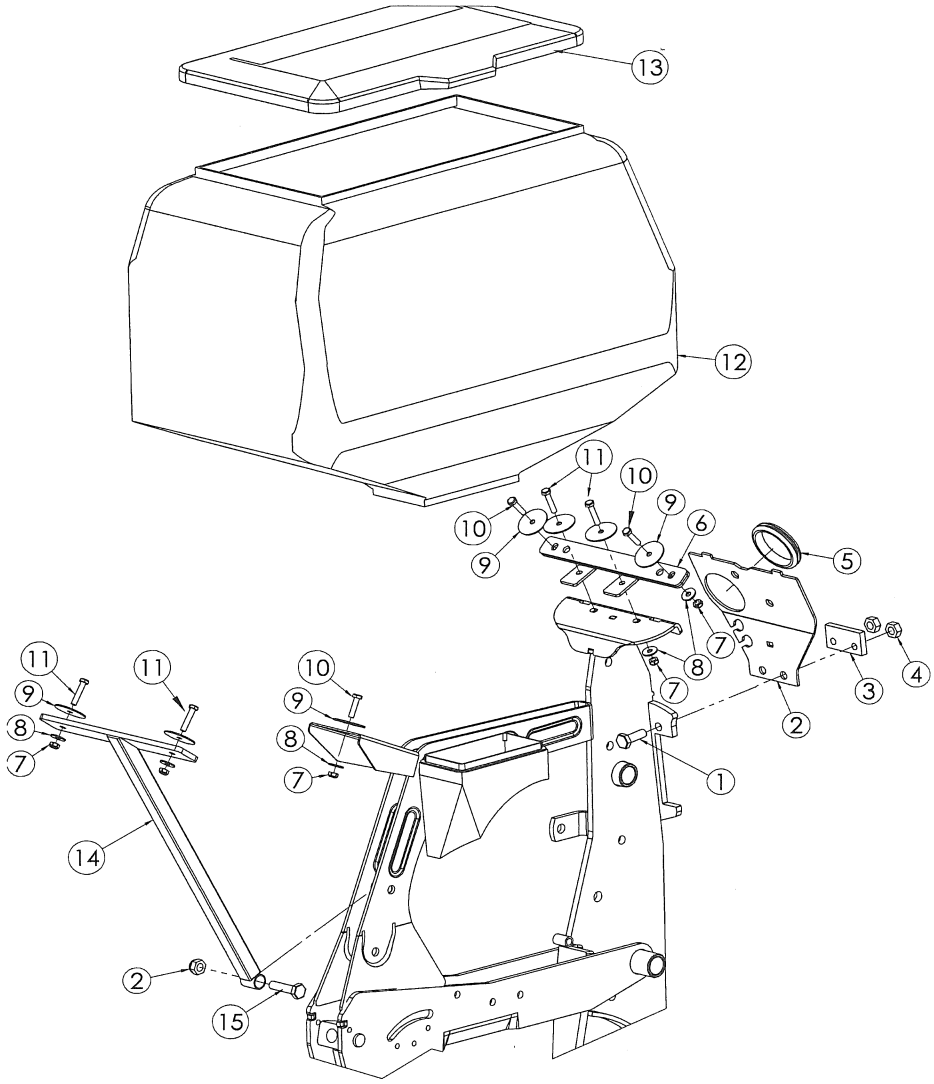

ITEM	PART No.	DESCRIPTION
1	HM-41030	Bolt, 10x30
2	20059176	Removable Faceplate NG+4
3	7124.A	Removable Stop NG+4
4	NM-21015	10mm Nylon lock nut
5	10219093	Grommet for Vacuum Hose
6	900384	3 Bushel Hopper Front Brace
7	NM-0605	6mm Nylon lock nut
8	W-9618	Washer, 6.5x18x1.5mm
9	W-0415	Washer, 1/4" x 1.5" Stainless
10	HM-0620	Bolt, 6x20
11	HM-0630	Bolt, 6x30
12	7077.4	Seed Hopper 3 Bushel
13	7104.CO	Hopper Lid W/ Spring
14	900383	3 Bushel Hopper Rear Brace
15	HM-41040	Bolt, 10x40

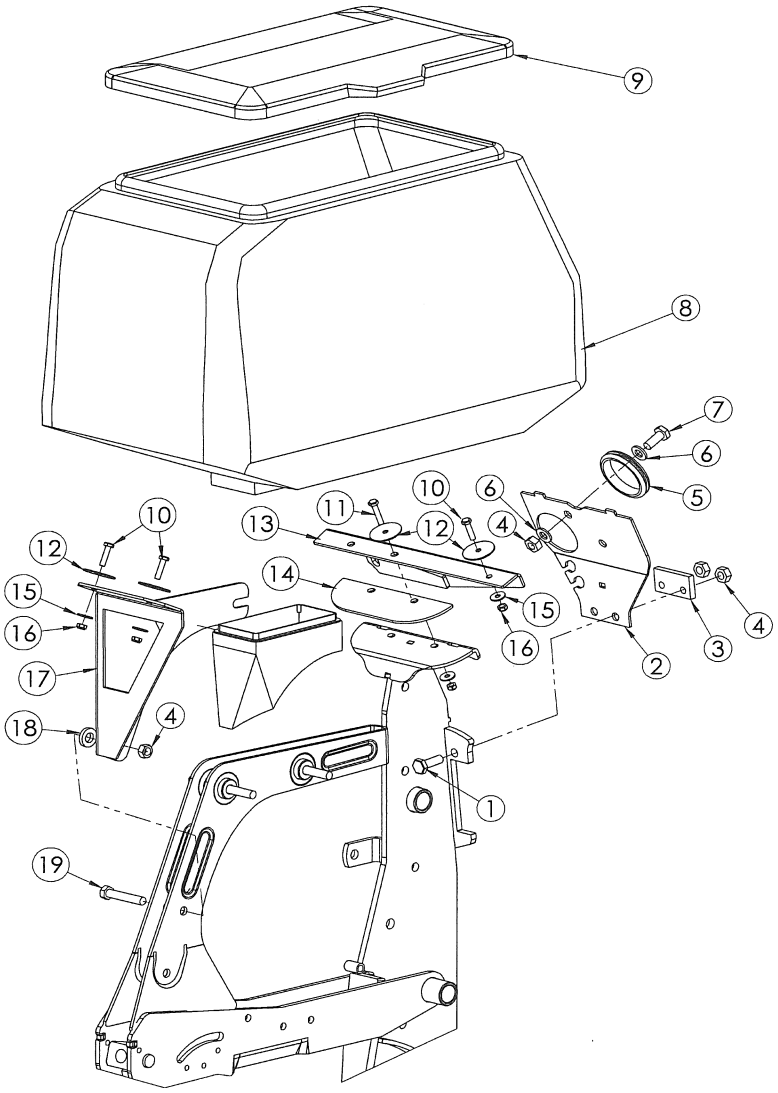

ITEM	PART No.	DESCRIPTION
1	HM-41030	Bolt, 10x30
2	20059176	Removable Face Plate NG+4
3	7124.A	Removable Stop NG+4
4	NM-21015	10mm Nylon Lock nut
5	10219093	Grommet for Vacuum Hose
6	W-2410	Flat Washer 3/8"
7	HM-41025	Bolt, 10x25
8	7077.3A	Reversed 2 Bushel Hopper
9	7104.CO	Hopper Lid W/ Spring
10	HM-0620	Bolt, 6x20
11	HM-0630	Bolt, 6x30
12	W-0415	Washer, 1/4" x 1.5" stainless
13	800518	Front Hopper Bracket
14	800517	Front Hopper Bracket Shim
15	W-9618	Washer, 16.5 x 18 x 1.5mm
16	NM-0605	6mm Nylon Lock nut
17	800501	Reverse Hopper Bracket, Rear
18	10621056	Flat Washer , 13 x 30 x 6mm
19	HM-41055	Bolt, 10x55

METERING BOX NG+4

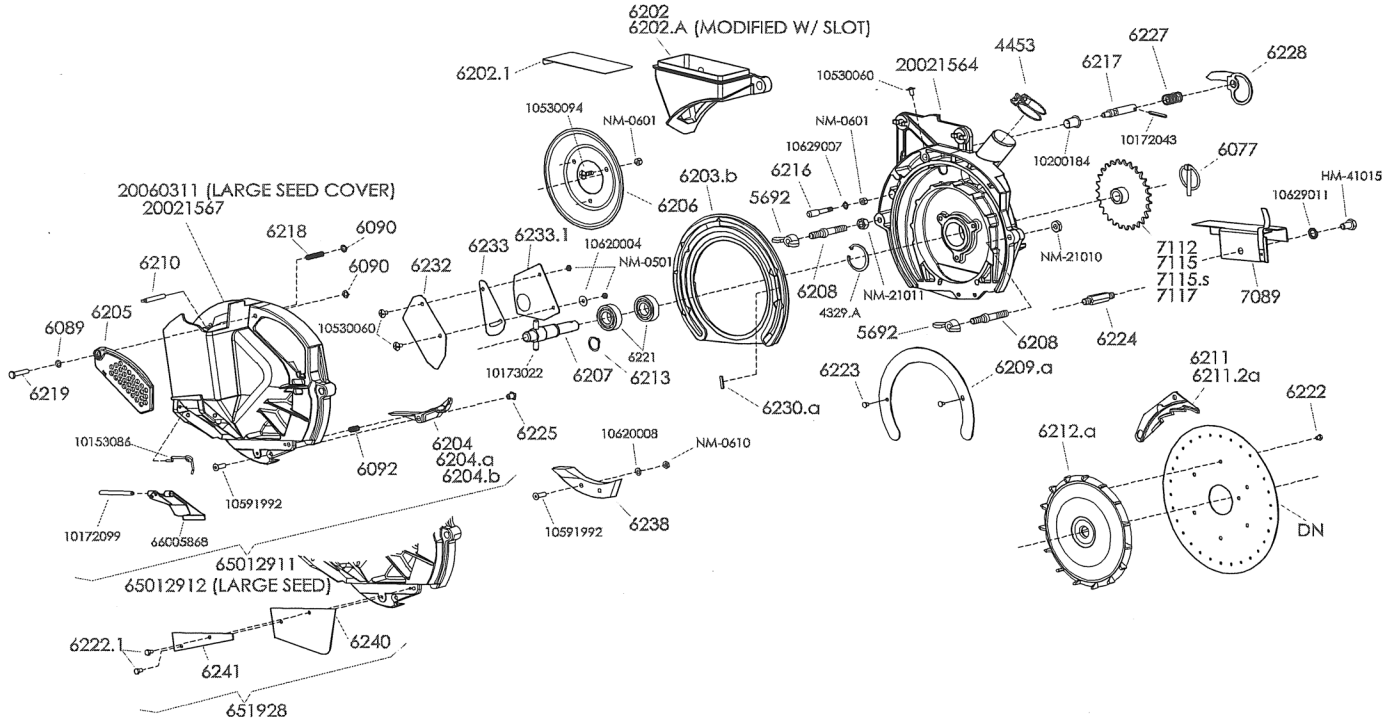

PART No.	DESCRIPTION
4329.a	Snapring, internal, 57mm
4453	Vac Hose Clamp
5692	Wing nut, 10mm
6077	Lynch pin, 6mm dia.
6089	Rubber ring
6090	Snapring, 6mm
6092	Spring
6202	Collar brace
6202.a	Coller Brace with slot
6202.1	Slide Plate for slotted Meter box collar
6203.b	Plastic insert
6204	Plastic Ejector
6204.a	Bronze ejector block assembly
6204.b	Bronze ejector, extended point
6205	Control window
6206	Tightening cap
6207	Shaft, meter box, uses 8x50 roll pin
6208	Threaded tightening rod for cover
6209.a	Brace for plastic insert
6210	Pressure pin scraper
6211	Seed scraper, standard
6211.2a	Seed scraper, extra large seed
6212.a	Agitator, brass
6213	Snapring, external, 20mm
6216	Fixed pin for seed scraper
6217	Adjustable pin for seed scraper, uses 4x35 roll pin
6218	Spring for selector
6219	Pin for control window
6221	Bearing 42mm, (ref. 60042RS)
6222	Screw, for agitator, 5x6
6222.1	Screw for wind flap, 5x8
6223	Screw, 5x6 with thin head for 6209.a
6224	Connector Pin Chainshield
6225	Nut, to secure ejector block
6227	Spring for selector handle
6228	Selector handle
6230.a	Removable Plug
6232	Gasket for inside meter box cover
6233	Shutter, standard cover
6233.1	Shutter for small seed, std cover

PART No.	DESCRIPTION
6233.2	Shutter for medium seed, std cover
6233.2s	Shutter for small seed, large cover
6233.3s	Shutter for medium seed, large cover
6238	Aluminum ejector block (for large seed covers)
6240	Rubber shield
6241	Metal tightener plate
7089	Fixed Chain housing
7112	Sprocket, 21 tooth (20% speed up from std # 7115)
7115	Sprocket, 26 tooth, metric 5R chain, standard
7115.s	Sprocket, 26 tooth, #41 chain, standard
7117	Double sprocket, 26-12 to drive US insecticide
10153086	Spring for trap door
10172043	Roll pin, 4x35 for 6217 pin
10172099	Roll pin, 6x70 to secure trap door
10173022	Roll pin, 8x50 for 6207 shaft
10200184	Plastic insert for seed scraper
10530060	Screw, 5x10 w/phillips head
10530094	Screw, 6x20 w/phillips head
10591992	Screw, 6x16 w/countersunk head for ejector block assy.
10620004	Washer, 5.5x16x1mm
10620008	Washer, 6.5x12x.6mm
10629007	Lockwasher, External tooth 6mm
10629011	Lockwasher, External tooth 10mm
20021564	Housing only for meter box
20021567	Meter box cover only
20060311	Large Seed Meter box cover only
HM-41015	Hex Bolt 10-1.5x16mm
NM-0501	Hex Nut 5mm
NM-0601	Hex Nut 6mm
NM-0610	Jam Nut 6mm
NM-21010	Jam Nut 10mm
NM-21011	Hex Nut 10mm
651928	Protection kit
66005868	Trap door NG+4
65012911	Standard cover complete
65012912	Large seed cover complete

Metering box complete	
65032072	Complete meter box, w/26T sprocket/collar
65032073	Complete meter box,large seed, w/26T sprocket/collar

BELT #	RPM/APPLICATION # OF GROOVES	MARKING ON BELT	FLAT LENGTH	WIDTH
	19 GROOVES			
4413	450/540 RPM Regular turbofan	460J19 PJ1168/460J(older fans)	22 3/4"	1-3/4"
4413.1	1000 RPM Regular turbofan	960J PJ965/380J(older fans)	19"	1-3/4"
	20 GROOVES			
4413.A	500 RPM Hi-output turbofan	490J PJ1244/151J(older fans)	24 1/4"	1-7/8"
4413.1A	1000 RPM Hi-output turbofan	991J or PJ991/390J	19 1/2"	1-7/8"
4249	540 RPM Extra Hi-output turbofan	1335J EJ151 or PJ1335/151	26 1/4"	1-7/8"
4249.1	1000 RPM Extra Hi-output turbofan	PJ1092/430J	21 1/4"	1-7/8"
	25 GROOVES (new in 2005)			
4413.B	500 RPM Hi-output turbofan	490J PJ1244/151J(older fans)	24 1/4"	2-1/4"
4413.1B	1000 RPM Hi-output turbofan	PJ991/390J	19 1/2"	2-1/4"
4249.2	540 RPM Extra Hi-output turbofan	1335J EJ151 or PJ1335/151	26 1/4"	2-1/4"
4249.3	1000 RPM Extra Hi-output turbofan	PJ1092/430J or 1092J	21 1/4"	2-1/4"

VACUUM HOSE CHART FOR PLANTERS

Planter Size	Approx. total feet of hose needed
2 ROW 36"	10'
2 ROW 40"	10'
4 ROW 30"	22'
4 ROW 36"	29'
4 ROW 40"	30'
6 ROW 22"	40'
6 ROW 30"	41'
6 ROW 36"	53'
6 ROW 40"	54'
8 ROW 22"	60'
8 ROW 30"	64'
8 ROW 36"	85'
8 ROW 40"	85'

Hose for NG, NG+, NG+2, NG+3, NG+4
#4454 - 40mm Vacuum Hose
#4454.50- 40mm Vacuum Hose-50 ft roll
Hose for MS
#4416-35mm Vacuum Hose

REGULAR TURBOFANS
Blade (4403.B Plastic)

450

@ 450 RPM
Fan Speed
is 5046 RPM
@ 540 RPM
Fan Speed
is 6055 RPM

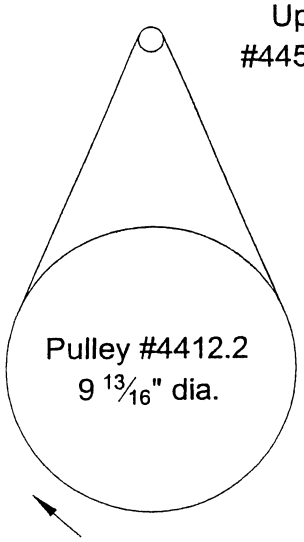

540

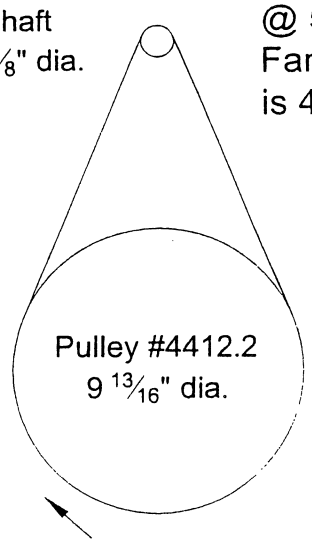

1000

@ 1000 RPM
Fan Speed
is 4722 RPM

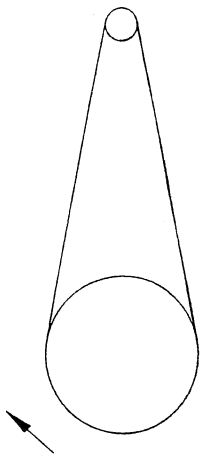

HI OUTPUT TURBOFANS
Blade (4403.D Aluminum)

500

@ 500 RPM
Fan Speed
is 5055 RPM
@ 540 RPM
Fan Speed
is 5459 RPM

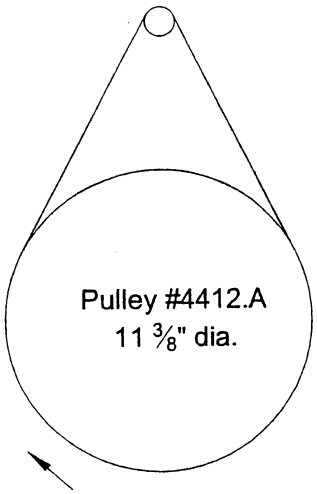

Upper shaft
#4452.A 1 1/8" dia.

500 RPM
Belt #4413.A
Approx. 24 1/4"
when folded flat

1000

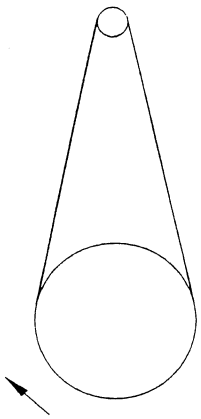

@ 1000 RPM
Fan Speed
is 5222 RPM

Pulley #4412.1A
5 7/8" dia.

1000 RPM
Belt #4413.1A
Approx. 19 1/2"
when folded flat

EXTRA HI OUTPUT TURBOFANS
Blade (4244 Aluminum)

540

@ 500 RPM
Fan Speed
is 4136 RPM
@ 540 RPM
Fan Speed
is 4467 RPM

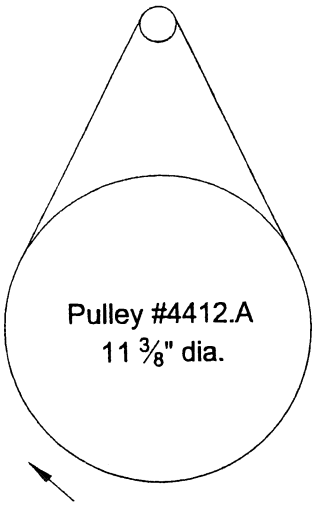

Upper shaft
#4248 1 3/8" dia.

540 RPM
Belt #4249
Approx. 26 1/4"
when folded flat

1000

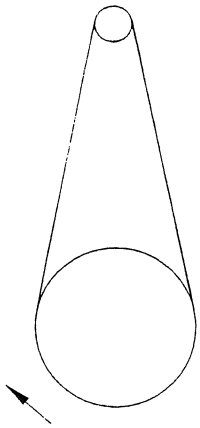

@ 1000 RPM
Fan Speed
is 4272 RPM

Pulley #4412.1A
5 7/8" dia.

1000 RPM
Belt #4249.1
Approx. 21 1/4"
when folded flat

TURBOFAN BLADES

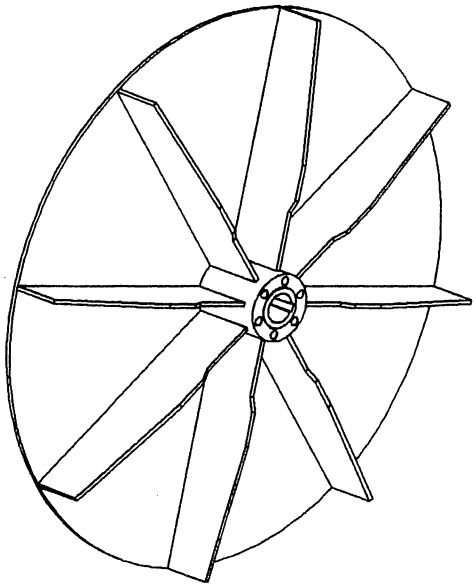

4403.B - Plastic
Blade for Standard Turbofans
16-1/8" dia. w/7/8" dia. hole(22mm)

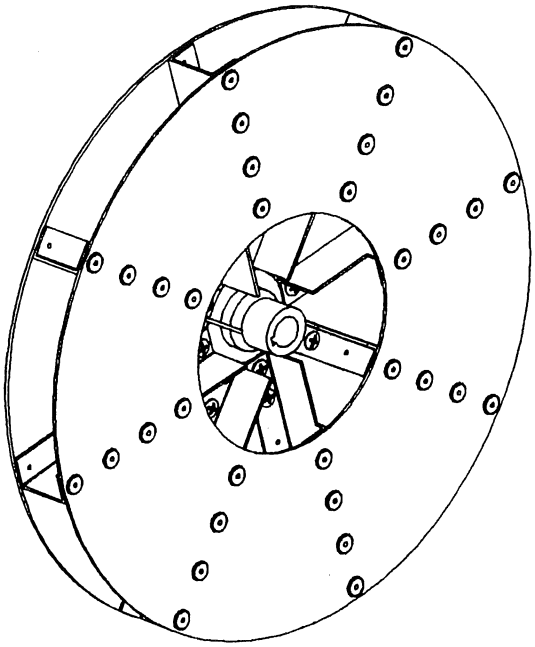

4403.D - Aluminum
Blade for Hi-Output Turbofans
17-3/4" dia. w/7/8" dia. hole(22mm)
This blade replaces 4403.C, which looked similar, but was made out of plastic.

4244.CO - Aluminum
Blade for Extra Hi-Output Turbofans
19-5/8" dia. w/1-3/16" dia. hole(30mm)

RPM & APPLICATION	BELT #	UPPER SHAFT # Shaft dia.	PULLEY #	PULLEY dia./width
19 Grooves/1-3/4" wide belt				
450 RPM Regular turbofan	4413	4452.1 7/8" dia.	4412.2	9-13/16" 2"
540 RPM Regular turbofan	4413	4452 1-1/8" dia.	4412.2	9-13/16" 2"
1000 RPM Regular turbofan	4413.1	4452 1-1/8" dia.	4412.3	5-5/16" 2"
20 Grooves/1-7/8" wide belt				
500 RPM Hi-output turbofan	4413.A	4452.A 1-1/8" dia.	4412.A	11-3/8" 2"
1000 RPM Hi-output turbofan	4413.1A	4452.A 1-1/8" dia.	4412.1A	5-7/8" 2"
540 RPM Extra Hi-output turbofan	4249	4248 1-3/8" dia.	4412.A	11-3/8" 2"
1000 RPM Extra Hi-output turbofan	4249.1	4248 1-3/8" dia.	4412.1A	5-7/8" 2"
New in 2005 **25 Grooves/2-1/4" wide belt**				
500 RPM Hi-output turbofan	4413.B	4452.B 1-1/8" dia.	4412.B	11-3/8" 2-3/8"
1000 RPM Hi-output turbofan	4413.1B	4452.B 1-1/8" dia.	4412.1B	5-7/8" 2-3/8"
540 RPM Extra Hi-output turbofan	4249.2	4248.1 1-3/8" dia.	4412.B	11-3/8" 2-3/8"
1000 RPM Extra Hi-output turbofan	4249.3	4248.1 1-3/8" dia.	4412.1B	5-7/8" 2-3/8"

STANDARD TURBOFAN
(450, 540, 1000 RPM)

ITEM	PART No.	DESCRIPTION
1	4532	Support strap - 565mm long
	4532.1	Support strap - 340mm long
	4532.2	Support strap - 480mm long
2	4451	Plastic Cap
3	10620064	Washer M8.5x16x2
4	10511062	Bolt, M8x55 (to Secure Manifold)
5	4450	12-Hole Manifold
6	4453	Hose Clamp
7	4454	Vacuum Hose (40mm ID, Specify Length)
8	4402.B	Fan Housing (Manifold Side)
9	NM-72005	Nylon Locknut 20mm (to Secure Fan Blade)
10	10623042	Washer, 22.5x48x3 (On Upper Shaft)
11	4403.B	Fan Blade (Plastic, 16 1/8" dia.)
12	6090	Snapring (6mm)
13	6089	Rubber Ring
14	4455	Pin for Outlet Shield
15	4429.A	Outlet Shield
16	10500091	Hex bolt M6 x 12
17	4401.B	Fan Housing (Support Frame Side)
18	4400.1	Support Frame
19	4440	Bolt for Belt Tension Adjustment
20	4407	Bearing 62mm (62062RS)
21	4410.A	Spacer Tube (Upper Shaft), 18mm wide
22	4408	Bearing 72mm (63062RS)
23	4409	Snapring, internal (72mm)
24	4452	Upper Shaft, 540 & 1000 rpm (1 1/8" dia. Pulley)
	4452.1	Upper Shaft, 450 rpm (7/8" dia. Pulley)
25	4439.A	Key Stock for Upper Shaft (6x6x45mm)
26	NM-21015	Lock nut M10
27	10620089	Washer M10.5x20x2
28	4414.1	Cover Shield for Belt
	4414.2	Cover shield for Belt (for Pump Pulley)
29	4428.B	PTO drive shaft 540 rpm 24"
	4428.B21	PTO drive shaft 1000 rpm 24"
	4431.B	PTO drive shaft 540 rpm 36"
	4431.B21	PTO drive shaft 1000 rpm 36"
	4432.B	PTO pull type 540 rpm 54"
	4432.B21	PTO pull type 1000 rpm 54"
	900058	PTO pull type w/20 spline 54"
30	4434.4	Safety shield
31	4405.A	Lower shaft (w/1 3/8" 6 Spline Adaptor)
	4405.A2	Lower shaft extended, for 7x7 toolbar w/PTO drive
32	4404	Shaft housing (lower drive shaft)
	4404.3	Shaft housing extended, for 7x7 toolbar w/PTO drive
33	4411	Spacer Tube on Lower Shaft
	4411.2	Spacer tube extended, for 7x7 toolbar w/PTO drive
34	10624018	Washer, 31x41x3

STANDARD TURBOFAN
(450, 540, 1000 RPM)

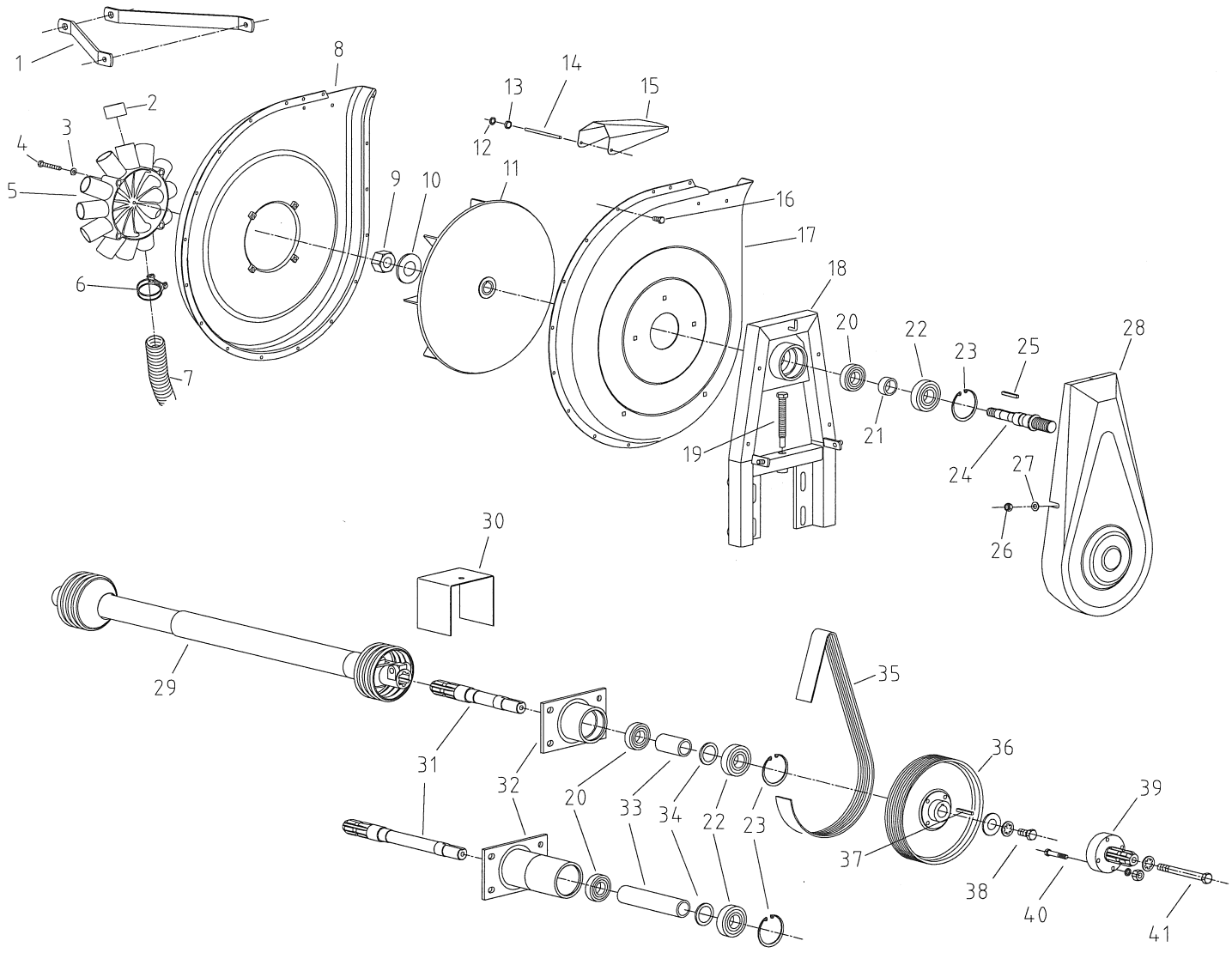

ITEM	PART No.	DESCRIPTION
35	4413	Belt, 450 & 540 rpm (PJ1168/460J or 460J19)
	4413.1	Belt, 1000 rpm (PJ955/376J)
36	4412.2	Pulley, 450 & 540 rpm (9 13/16" dia.)
	4412.3	Pulley, 1000 rpm (5 5/16" dia.)
37	4437	Key Stock for Lower Shaft (8x7x40mm)
38	HM-61230	Bolt, M12x30 (to Secure Pulley)
	10621061	Washer, 13x40x4mm (to Secure Pulley)
	10101012	External Tooth Lock Washer (12x20mm)
39	4426	Pump Pulley (6 Spline Stub Shaft)
40	HM-2850	Bolt, M8x50
	10629009	External Tooth Lock Washer (8x14mm)
41	HM-65110	Bolt, M12x110
	10101012	External Tooth Lock Washer (12x20mm)
	650437	Complete lower shaft assembly, standard
	650435	Complete lower shaft assembly, for 7x7 toolbar w/PTO drive

ITEM	PART No.	DESCRIPTION	
1	4532	Support strap – 565mm long (22 ¼")	
	4532.1	Support strap – 340mm long (13 3/8")	
	4532.2	Support strap – 480mm long (18 7/8")	
2	4451	Plastic cap	
3	10620064	Washer 8.5x16x2mm	
4	10511062	Bolt, M8x55 (to secure manifold)	
5	4450	12-hole manifold	
6	4453	Hose clamp	
7	4454	Vacuum hose 40mm ID (specify length)	
8	4402.C	Fan Housing, (manifold Side)	
9	NM-2855	Lock nut, M20 (to secure fan blade)	
10	10623042	Washer, 22.5x48x3mm	
11	4403.D	Fan Blade (aluminum, 17 3/4" Dia.)	
12	6090	Snap ring (6mm)	
13	6089	Rubber ring	
14	4455	Pin for outlet shield	
15	4429.A	Outlet shield	
16	10500091	Hex bolt M6x12	
17	4401.B	Fan Housing, (support frame side)	
18	4440	Belt tension adjustment bolt	
19	4400.1A	Support Frame	
20	4407	Bearing 62mm (62062RS)	
21	4410	Spacer bushing (upper shaft), 36mm wide	
22	4408	Bearing 72mm (63062RS)	
23	4409	Snap ring, internal (72mm)	
24	4439.A	Key stock for upper shaft (6x6x45mm)	
25	4452.A	Upper shaft (1 1/8" Dia. Pulley)	Prior to 2006, 20 grooves
	4452.B	Upper shaft (1 1/8" Dia. Pulley)	25 grooves
26	NM-21015	Lock nut M10	
27	10620089	Washer 10.5x20x2mm	
28	4414.1A	Cover shield for belt	
29	4428.B	PTO drive shaft 540 rpm, 24" long	
	4431.B	PTO drive shaft 540 rpm, 36" long	
	900057	PTO drive shaft HD 1000 rpm 20 spline	
30	4434.3	Safety shield	
31	4405.A	Lower shaft (1 3/8" 6-spline)	
	4405.A2	Extended shaft, for 7x7 toolbar w/PTO drive	
32	4404.A	Shaft Housing (lower drive shaft)	
	4404.3	Extended housing, for 7x7 toolbar w/PTO drive	
33	4411	Spacer bushing (lower shaft)	
	4411.2	Long bushing, for 7x7 toolbar w/PTO drive	
	650444	Complete lower shaft assembly	
	650435	Complete lower shaft assembly, for 7x7 toolbar w/PTO drive	

HI OUTPUT TURBOFAN
(500, 1000 RPM)

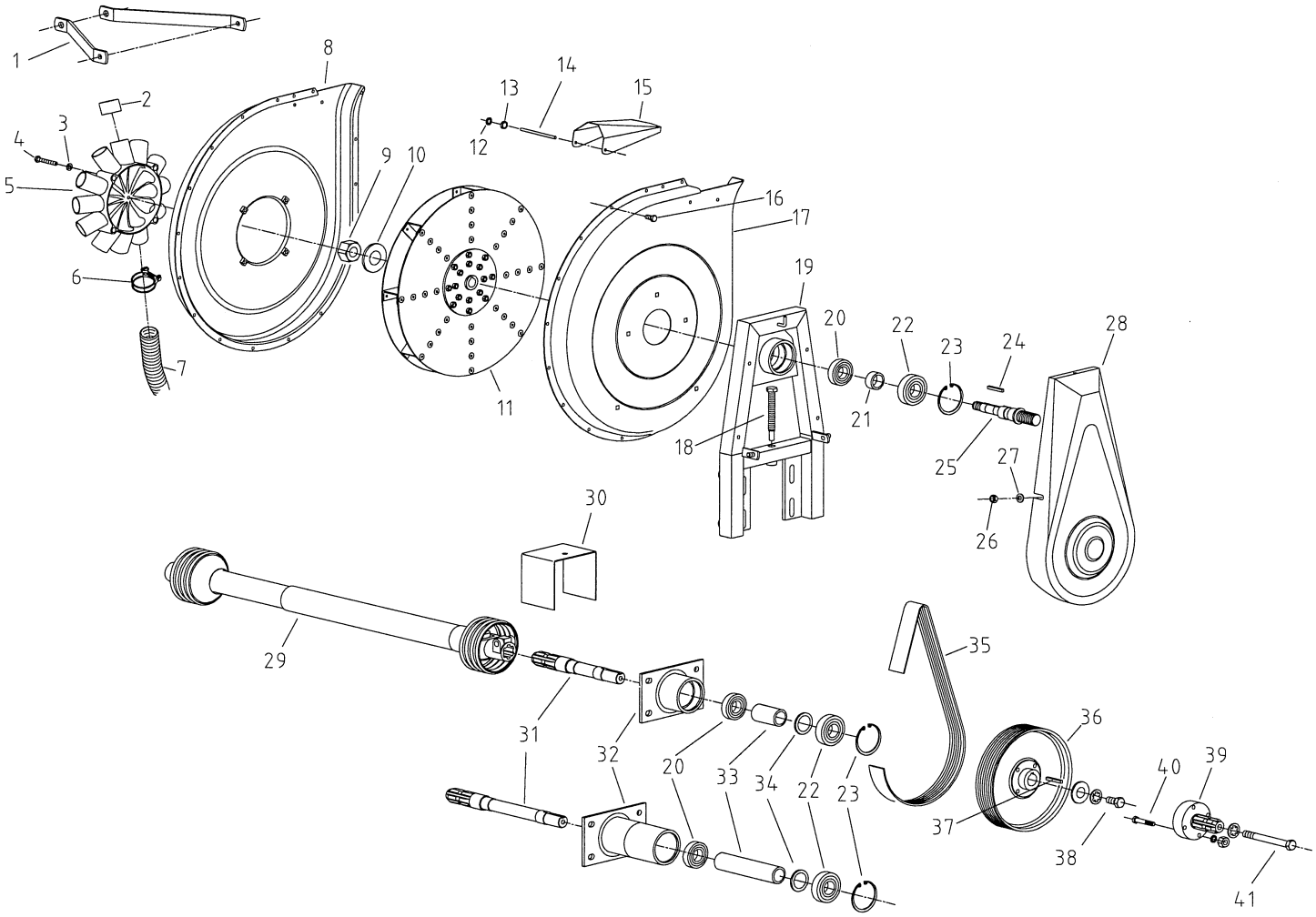

ITEM	PART No.	DESCRIPTION	
34	10624018	Washer, 31x41x3mm	
35	4413.A	Belt, 500 rpm (1244J151)	Prior to 2006, 20 grooves, 1-7/8" wide
	4413.1A	Belt, 1000 rpm (P991J390)	Prior to 2006, 20 grooves, 1-7/8" wide
	4413.B	Belt, 500 rpm (1244J151)	25 grooves, 2-1/4" wide
	4413.1B	Belt, 1000 rpm (P991J390)	25 grooves, 2-1/4" wide
36	4412.A	Pulley, 500 rpm (11 3/8" Dia.)	Prior to 2006, 20 grooves
	4412.1A	Pulley, 1000 rpm (5 7/8" Dia.)	Prior to 2006, 20 grooves
	4412.B	Pulley, 500 rpm (11 3/8" Dia.)	25 grooves
	4412.1B	Pulley, 1000 rpm (5 7/8" Dia.)	25 grooves
37	4437	Key stock for lower shaft (8x7x40mm)	
38	HM-61230	Bolt, M12x30 (to secure pulley)	
	10621061	Washer, 13x40x4mm (to secure pulley)	
	10101012	External tooth lock washer (12x20mm)	
39	4426	Pump pulley (6 spline stub shaft)	
40	HM-2850	Bolt M8x50	
	10629009	External tooth lock washer (8x14mm)	
41	HM-65110	Bolt, M12x110	
	10101012	External tooth lock washer (12x20mm)	

HYDRAULIC DRIVE, STANDARD, HI OUTPUT & EXTRA HI OUTPUT TURBOFAN

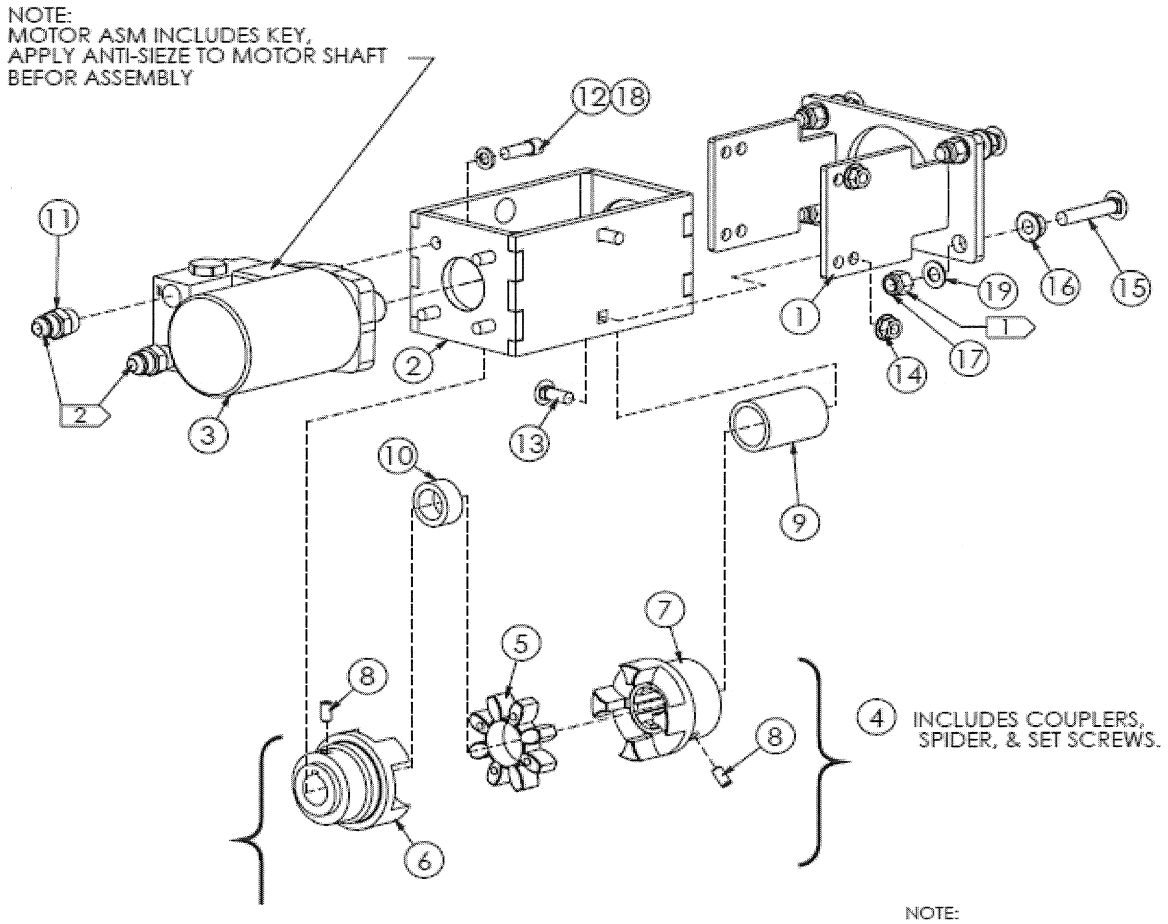

NOTE:
1 TORQUE N-3101 TO 35 FT.-LBS. ±5 FT.-LBS.
2 1/2" HYDRAULIC HOSE LINES.

ITEM NO.	QTY.	PART NUMBER	DESCRIPTION
1	1	200266	FRONT BRACKET
2	1	200161	MOTOR BRACKET
3	1	FTA0232-1	STD & HI OUTPUT TURBO MOTOR, W/BYPASS BLOCK
	1	FTA0425	EXTRA HI OUTPUT TURBO MOTOR, W/BYPASS BLOCK
4	1	640925	COUPLING
5	1	5041	ELASTIC SHOCK ABSORBER
6	1	5042	COUPLING, MOTOR SIDE, 1" KEYED
7	1	5040	COUPLING, TURBOFAN END, 6 SPLINE
8	2	10591915	SCREW, SOCKET SET , M8 x 16
9	1	5039	COUPLING SPACER, 62MM LONG
10	1	800436	REINFORCEMENT RING
11	2	TA6400-8-8	1/2 MALE JIC-1/2 MALE O-RING
12	4	F23305	SCREW, SOCEKET HEAD CAP , 3/8"-16 X 1"
13	4	CB-2210	BOLT, CARRIAGE, 3/8"-16 X 1" G5
14	4	N-2301	NUT, FLANGE, SERRATED, 3/8"-16
15	4	CB-3323	BOLT, CARRIAGE, 7/16"-14 X 2-1/4" FULL THRD G5
16	4	N-3103	NUT, FLANGE, SERRATED, 7/16"-14
17	4	N-3101	NUT, NYLOCK 7/16"-14 G5
18	4	W-2610	WASHER, SPLIT, 3/8" G8 YZ
19	4	W-3410	WASHER, FLAT, 7/16" SAE G8 YZ

STANDARD, HI OUTPUT & XHO FAN MOTORS

100145 - COMPLETE HYDRAULIC DRIVE KIT FOR STANDARD FAN

100092 - COMPLETE HYDRAULIC DRIVE KIT FOR EXTRA HI OUTPUT FAN

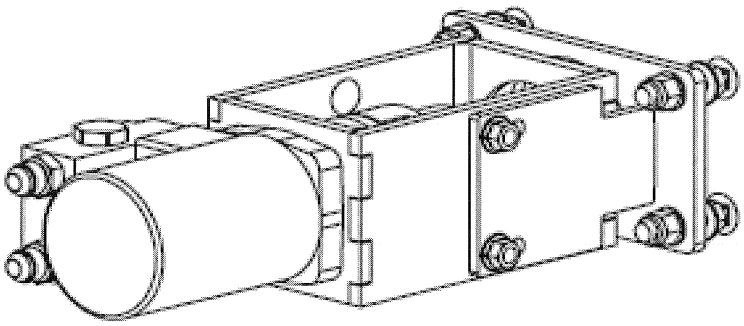

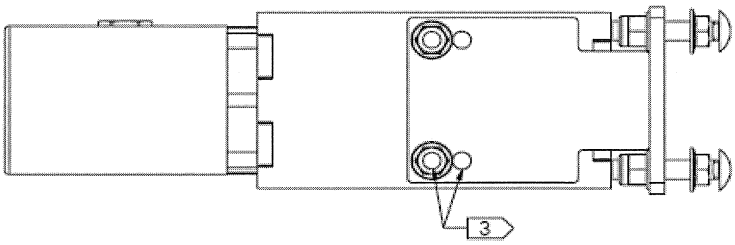

3 USE FRONT HOLE FOR STANDARD TURBO FAN,
USE BACK HOLE FOR HIGH OUTPUT TURBO FAN.
USE BACK HOLE FOR EXTRA HIGH OUTPUT TURBO FAN.

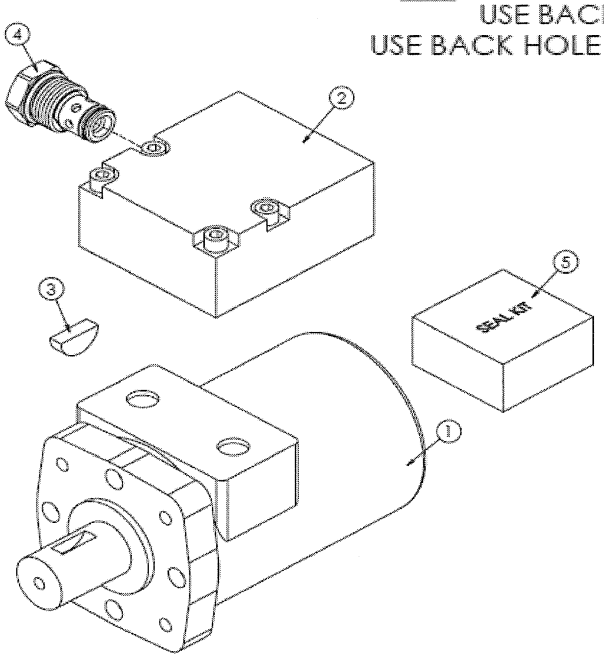

ITEM NO.	QTY.	PART NUMBER	DESCRIPTION
1	1	300982	HYDRAULIC MOTOR FOR XHO FAN
	1	300977	HYDRAULIC MOTOR FOR STD & HI OUTPUT FAN
2	1	FP10270-2	BYPASS BLOCK w/ HARDWARE
3	1	F14193	WOODRUFF KEY
4	1	900022	CHECK VALVE CARTRIDGE
5	1	F60540	SEAL KIT

ITEM	PART No.	DESCRIPTION
1	4532.2	Turbofan support strap - 480mm long
2	4451	Plastic cap, 40mm
3	10620064	Washer, 8.5x16x2mm
4	10511062	Hex head bolt, 8 x 55mm
5	4450	12 hole manifold
6	4453	Hose clamp
7	4454	Vacuum hose, 40mm ID
8	4242	Fan housing (manifold side)
9	4243	Fan housing sidewall
10	NM-72005	Nylon locknut, 20mm (to secure fan blade)
11	10623042	Washer 22.5x48x3mm
12	4253	Support eye
13	4244.co	Fan blade, aluminium 19 5/8" dia.
14	4241	Fan housing (support frame side)
15	4254	Screen
16	4429.a	Outlet shield
17	10500091	Hex bolt M6x12
18	9525	End cap
19	4240	Support frame
20	4440	Bolt to adjust belt tension
21	10624016	Washer, 31x41x2mm (on upper shaft)
22	4251	Bearing upper shaft (62072RS1)
23	4247	Spacer bushing (upper shaft), 41mm wide
24	4252	Bearing upper shaft (63072RS1)
25	4246	Snapring, internal (80mm)
26	4439.A	Key stock on upper shaft(6x6x45mm)
27	4248	Upper shaft, prior to 2006, 20 grooves
	4248.1	Upper shaft, 25 grooves
28	4250	Cover shield for belt
29	NM-21015	Lock nut M10
30	1062089	Washer 10.5x20x2mm
31	4434.3	Safety shield
32	4405.a	Lower shaft (w/1 3/8" 6 spline)
33	4404.a	Shaft housing (lower drive shaft)
34	4407	Bearing 62mm (62062RS)
35	4411	Spacer bushing (lower shaft)
36	4408	Bearing 72mm (63062RS)
37	10624018	Washer, 31x41x3mm
38	4409	Snapring, internal (72mm)
	650444	Complete lower shaft assembly
	644496	XHO Turbofan Assembly, 500 RPM- Less Manifold

EXTRA HI OUTPUT TURBOFAN
(540, 1000 RPM)

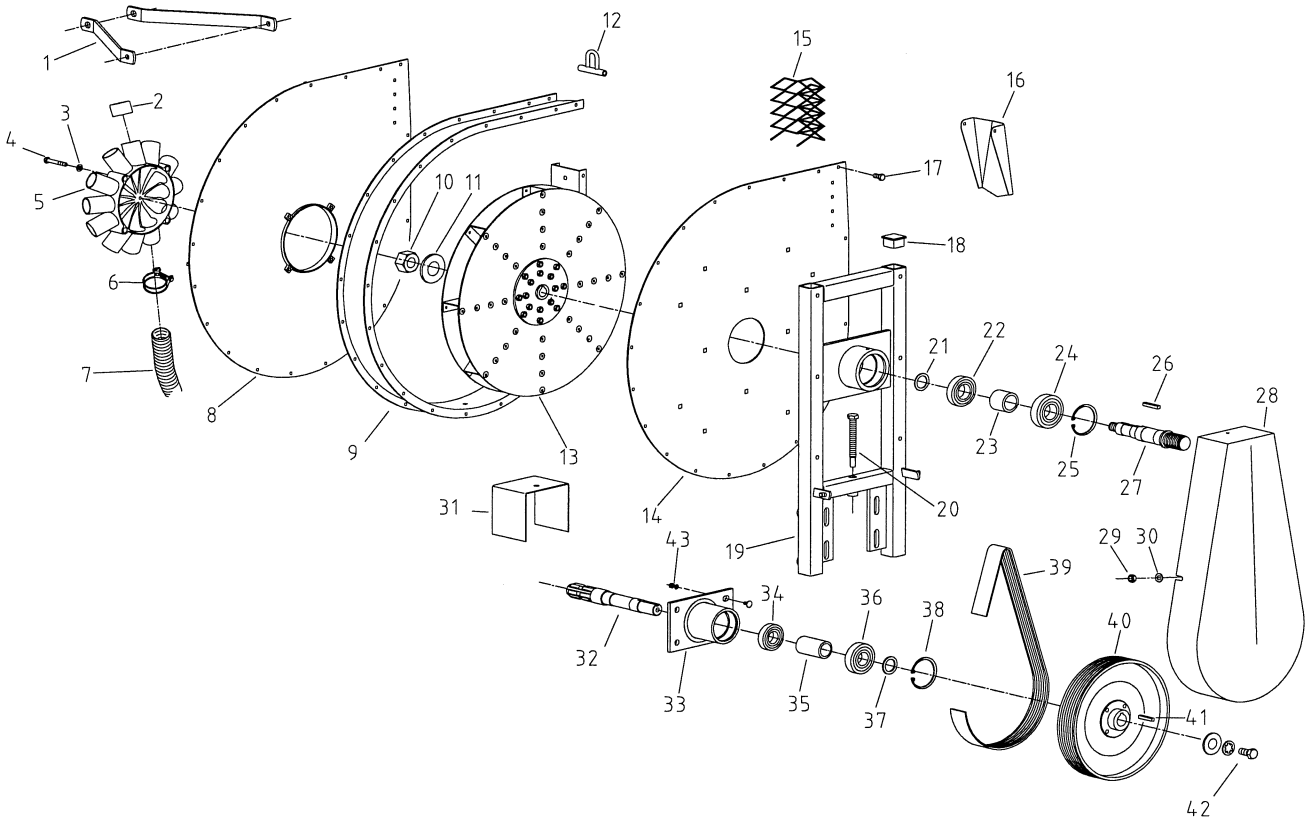

ITEM	PART No.	DESCRIPTION
39	4249	Belt, 540 rpm (P1335/151), prior to 2006, 20 grooves, 1-7/8" wide
	4249.1	Belt, 1000 rpm (P1092/430), prior to 2006, 20 grooves, 1-7/8" wide
	4249.2	Belt, 540 rpm, 25 grooves(1335/151), 2-1/4" wide
	4249.3	Belt, 1000 rpm, 25 grooves(P991/390), 2-1/4" wide
40	4412.A	Pulley, 540 rpm (11 3/8" Dia.), Prior to 2006, 20 grooves
	4412.1A	Pulley, 1000 rpm (5 7/8" Dia.), Prior to 2006, 20 grooves
	4412.B	Pulley, 540 rpm (11 3/8" Dia.), 25 grooves
	4412.1B	Pulley, 1000 rpm (5 7/8" Dia.), 25 grooves
41	4437	Key stock on lower shaft(8x7x40mm)
42	HM-61230	Hex bolt M12x30
	10621061	Washer 13x40x4mm
	10101012	Lock washer 12x20mm

TURBOFAN LOWER SHAFT DIMENSIONS

Hi Output and Extra High
Output Turbofan Shaft
Part #650444

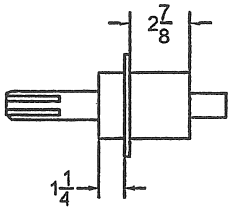

Fig. 1

Standard Turbofan Shaft
Part # 650437

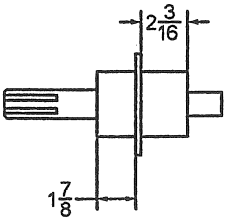

Fig. 2

Hi Output Turbofan W.Extended Shaft
for 7x7 toolbar with PTO Drive
Part #650435

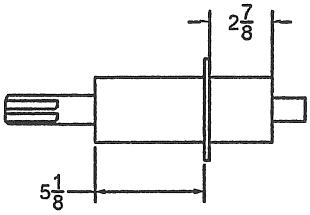

Fig. 3

This shaft must be replaced
with part #650444 if a
hyd. motor is to be used.

Turbofan Shaft for Double fan
Part #66009197

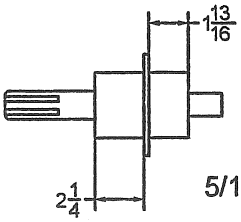

5/16" flange

Fig. 4

GAUGE INSTALLATION

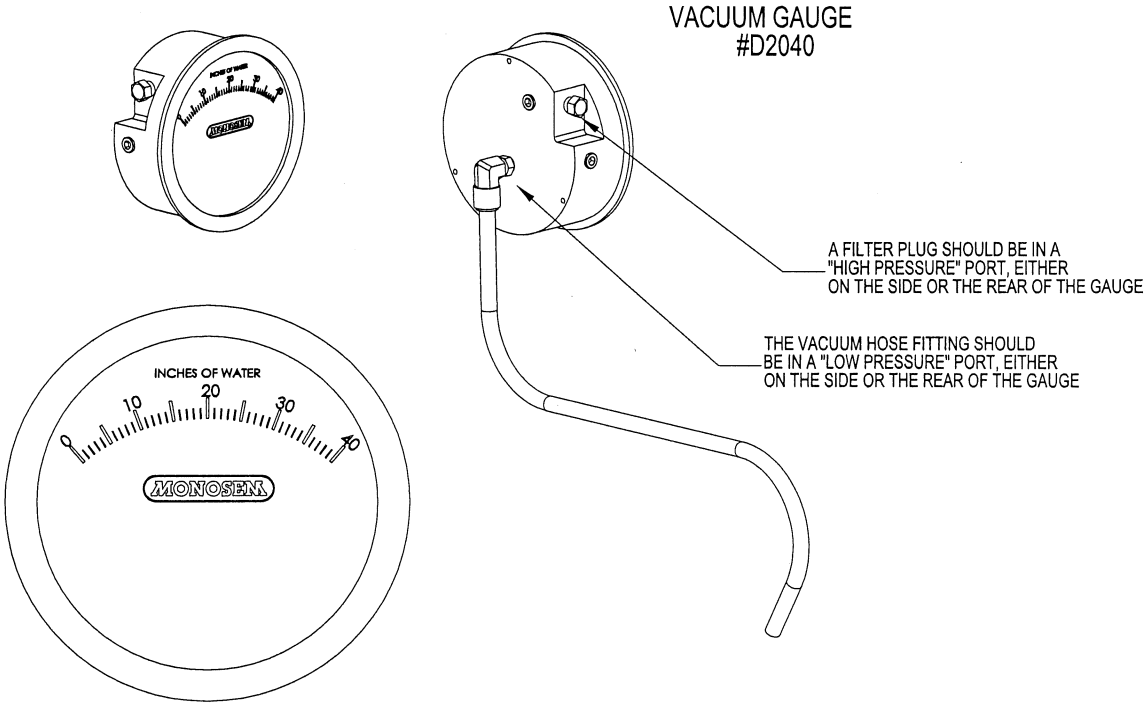

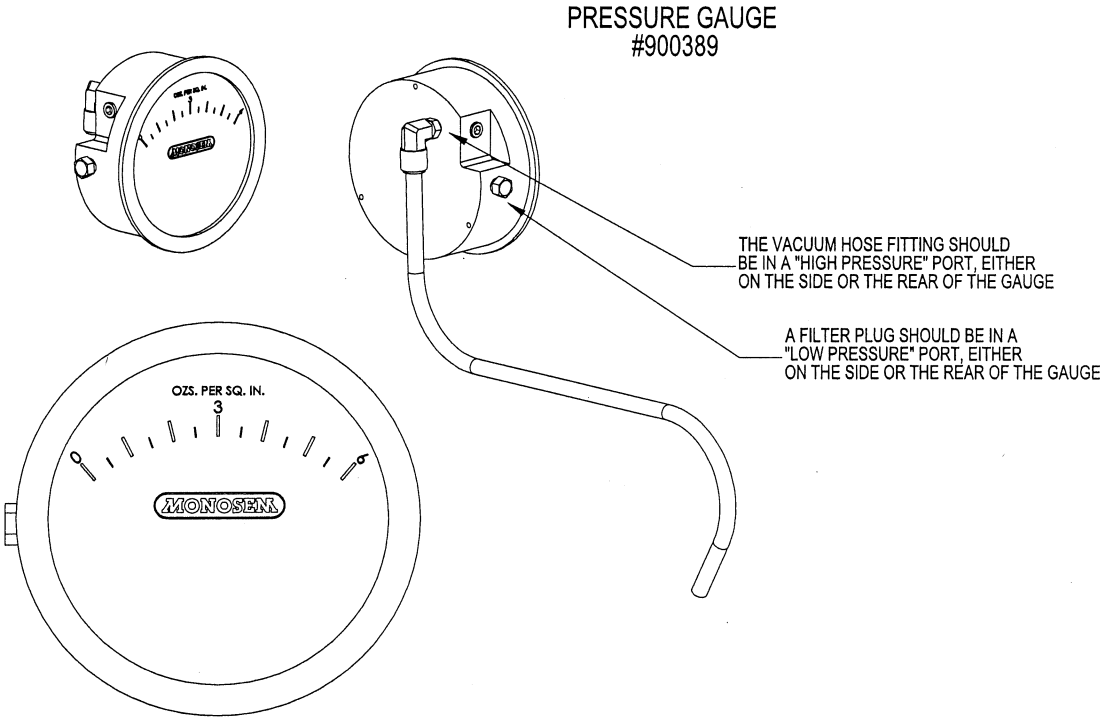

VACUUM GAUGE AND MOUNTING ASSEMBLIES

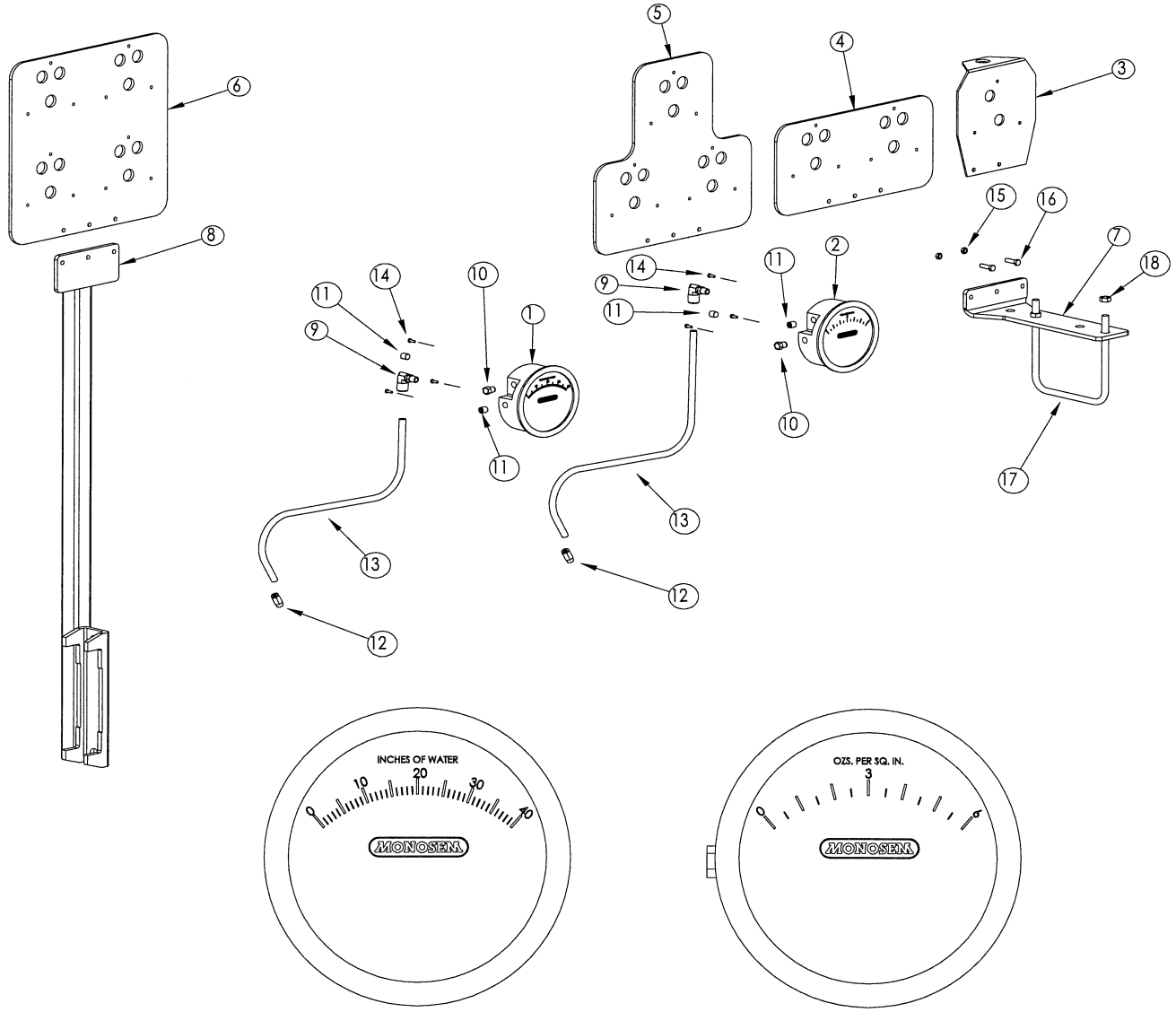

D2040
Vacuum Gauge

900389
Pressure Gauge

ITEM	PART No.	DESCRIPTION
1	D2040	Vacuum gauge
2	900389	Pressure gauge
3	M30050070	Mounting plate single
4	800187	Mounting plate double
5	800148	Mounting plate triple
6	800149	Mounting plate quadruple
7	800311	Panel mount mounted pltr.
8	800336	Panel mount pull type pltr.
9	T279PP-4-2	Swivel elbow fitting
10	D200108-00	Filter vent plug

ITEM	PART No.	DESCRIPTION
11	A-330	Pipe plug 1/8" NPT
12	T268-4-2	Swivel fitting
13	JPT04	Tubing 1/4"
14	F27295	Screw 6-32 x 3/8"
15	NM-0605	Nylon lock nut, 6mm
16	HM-0620	Bolt 6 x 20mm
17	4647.SS	U-bolt 5"x5"x3/8"-16
	4647.S	U-bolt 7"x7"x3/8"-16
	900240	U-bolt 5"x7"x3/8"-16
18	N-2101	Nylon lock nut 3/8-16

Slipclutch Complete assembly	Spring #	Sprocket Slipclutch #	Claw Slipclutch #	Bushing #
#4467.D	4311	4309.2B	4310.2A	4317.3*
#4467.G	4311	4309.1B	4310.1A	4317.3*
#4469.D	4635	4309.3	4632.DA	6914
#4469.G	4635	4309.4	4632.GA	6914
#4468.D	4635	4309.3	4632.D	6914
#4468.G	4635	4309.4	4632.G	6914

Assemblies 4468.G and D have been replaced with 4469.G and D.
*Bushing #4317.3 is not used when slipclutch is used on fixed drive wheel blocks.
Bushing #4317.3 has a 7/8" hex bore and #6914 has a round bore 1-3/16" in diameter.
Claw slipclutch #4310.2A is marked on casting with C12B.
Claw slipclutch #4310.1A is marked on casting with C12A.
Sprocket slipclutch #4309.3 is marked on casting 4309.1B and is milled out to 1-1/2" dia. for bushing #6914.
Sprocket slipclutch #4309.4 is marked on casting 4309.2B and is milled out to 1-1/2" dia. for bushing #6914.
A Phillips Head screw (6 x 10, #10530090) is used to mount the slipclutch housing (#4313).

4309.1B	Sprocket slipclutch, lefthand, 13 teeth
4309.2B	Sprocket slipclutch, righthand, 13 teeth
4309.3	Sprocket slipclutch, 13 teeth
4309.4	Sprocket slipclutch, 13 teeth
4310.1A	Claw slipclutch, lefthand(C12A on casting)
4310.2A	Claw slipclutch, righthand(C12B on casting)
4311	Spring
4312.A	Bushing & spring stop, uses 8x12 bolt
4313	Housing, fastens with 6x10 phillips head screw
4317.3	Bushing, 33mm, 7/8" hex bore
4632.D	Claw slipclutch, prior to 1994
4632.DA	Claw slipclutch
4632.G	Claw slipclutch, prior to 1994
4632.GA	Claw slipclutch
4633	Bushing stop & spring sleeve
4633.A	Bushing stop & spring sleeve
4635	Spring
6914	Bushing, self lubricated, 1-3/16" dia. bore
300600	Snapring, external (30mm)
10624024	Washer, 31x51x1.5
10530090	Phillips head screw, 6x10
HM-2812	Hex head bolt, 8x12

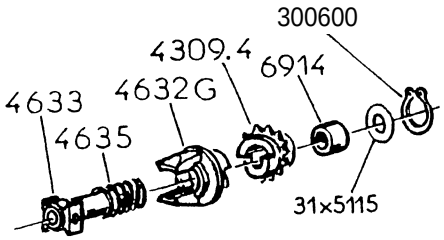

4468.G

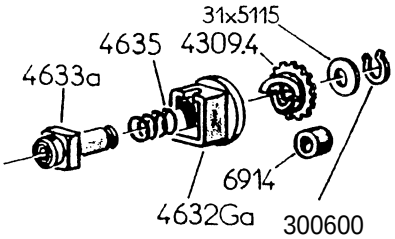

4469.G

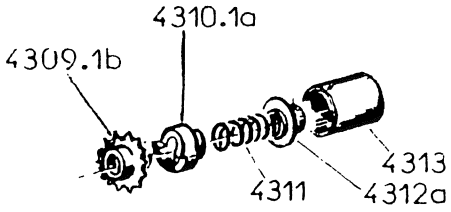

4467.G

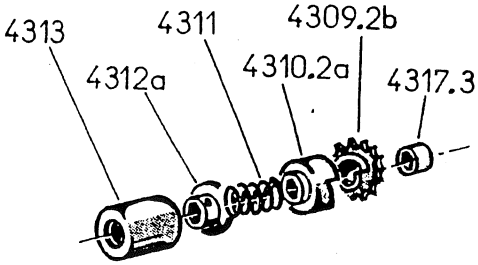

4467.D

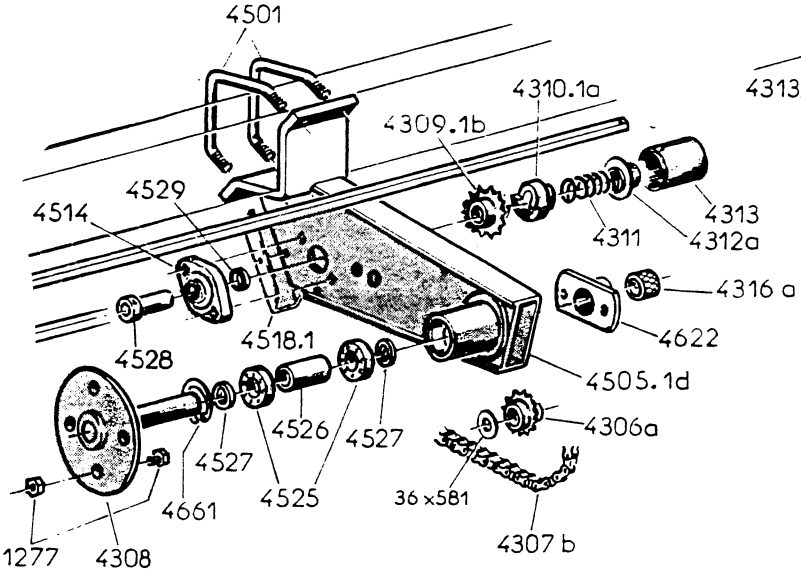

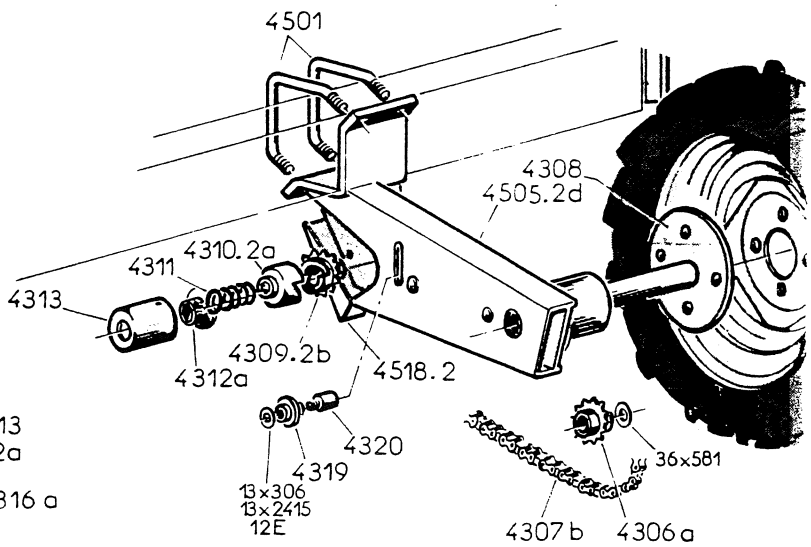

1277	Lug nut and bolt (14mm x 30mm)
4306.a	Sprocket, 13 teeth (takes two 6x45 roll pins)
4307.b	Chain, 13N (52 links w/conn. link)
4308	Hub (4 hole)
4309.1b	Sprocket slipclutch, lefthand, 13teeth, mates with 4310.1a
4309.2b	Sprocket slipclutch, righthand, 13teeth, mates with 4310.2a
4310.1a	Claw slipclutch, lefthand (C12A on casting)
4310.2a	Claw slipclutch, righthand (C12B on casting)
4311	Spring for slipclutch
4312.a	Bushing & spring stop (uses 8x12 bolt)
4313	Housing for slipclutch (fastens with 6x10 phillips head screw)
4319	Chain tightening idler
4320	Pin for chain tightening idler
4501	V-bolt, 16mm
4505.1d	Drive wheel housing, lefthand
4505.2d	Drive wheel housing, righthand
4514	Bearing w/pillow block complete
4514.1	Bearing only (GAY30NPPB ref. #)
4518.1	Front chain guard for lefthand wheel block
4518.2	Front chain guard for righthand wheel block
4525	Bearing (60072RS ref. #)
4526	Spacer (36mm ID x 83mm long)
4527	Spacer (36mm ID x 7mm long)
4528	Clutch sleeve
4529	Spacer bushing
10629013	External tooth locking washer, 12x20
10172094	Roll pin, 6x45
10621031	Washer, 13x24x1.5
10621056	Washer, 13x30x6
10624062	Washer, 36x58x1.5
900015.1	Tire & rim assembly (5.90x15)
G170106152	Tire only (5.90x15)

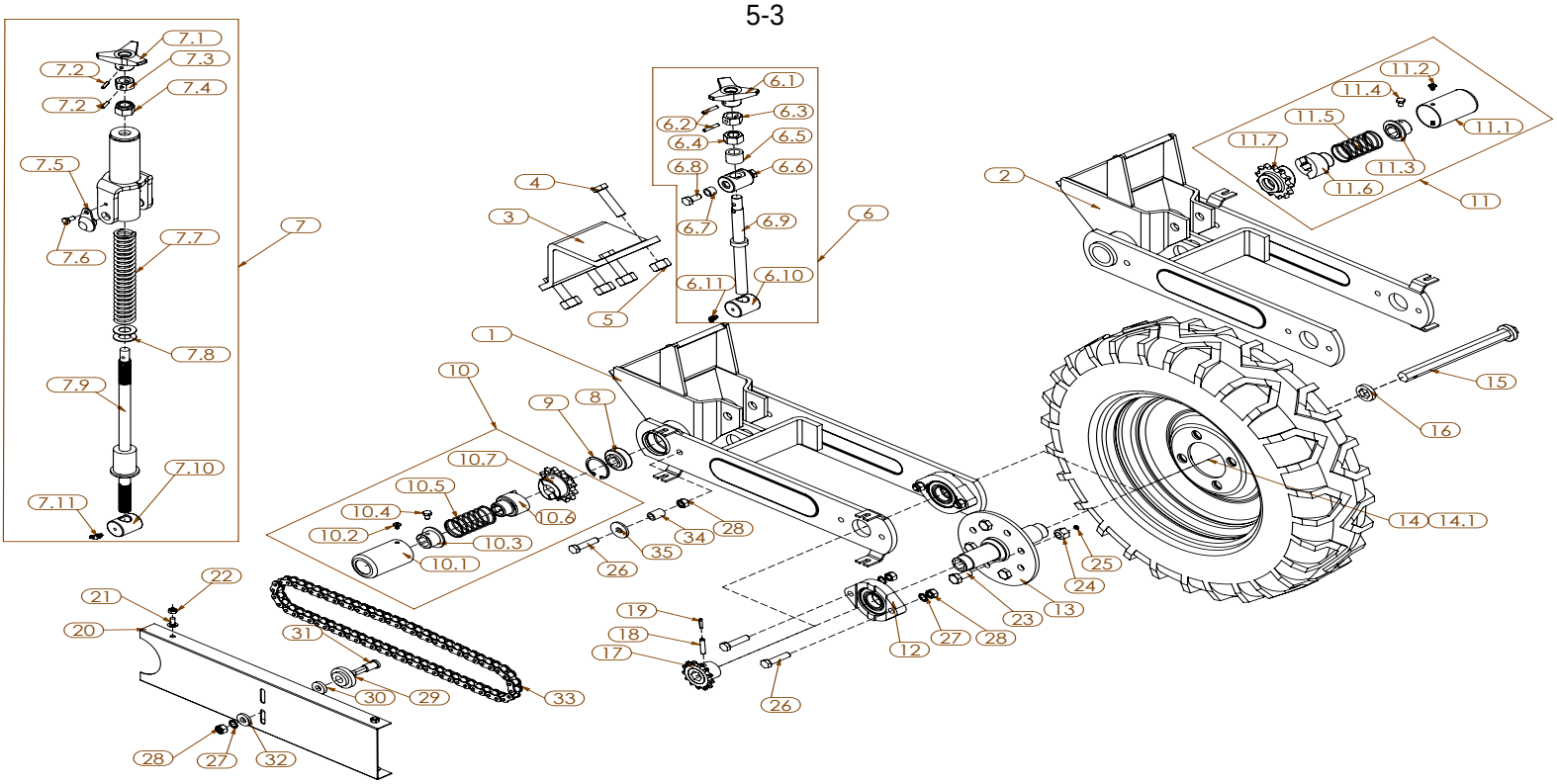

ITEM	PART NUMBER	DESCRIPTION
1	4710.2B	5X5, ADJUSTABLE WHL BLCK, RH
2	4710.1B	5X5, ADJUSTABLE WHL BLCK, LH
3	1534.A	CLAMP, 5 X 5
4	HM-81670	HEX, BOLT, 16 X 70, G8.8
5	NM-72001	NUT, HEX, 20mm, G8.8
6	653611	ADJUSTMENT SCREW ASSY
6.1	7083	KNOB
6.2	10172092	ROLL PIN, 6X35
6.3	4728	HEX NUT, 20MM W/6MM HOLE
6.4	NM-72001	NUT, HEX, 20mm, G8.8
6.5	4711	SPACER BUSHING
6.6	4717	PIVOT PIN
6.7	20019052	BUSHING, 12 ID X 18.5 OD X 13 L
6.8	HM-61225	HEX, BOLT, 12 X 25, G8.8
6.9	4714	ADJUSTING THREADED ROD
6.10	4715	PIVOT PIN
6.11	10118.A	GREASE ZERK, 45°, 6MM
7	650610	SCREW ADJUSTMENT, SPRING LOADED
7.1	7083	KNOB
7.2	301090	ROLL PIN, 5 X 24MM
7.3	4728	HEX NUT, 20MM W/6MM HOLE
7.4	NM-72005	NUT, NYLOCK, 20mm, G8.8
7.5	66005779	PIN, TRUNNION
7.6	HM-2816	HEX, BOLT, 8 X 16, G8.8
7.7	5666.2	SPRING
7.8	10623028	WASHER, 21 X 40 X 2 MM
7.9	4726	THREADED ROD, SPRING LOADED
7.10	4715	PIVOT PIN
7.11	10118.A	GREASE ZERK, 45°, 6MM
8	4659	BEARING, (205KRR2)
9	4660	SNAP RING, INTERNAL, 52MM
10	4467.D	HEX SHAFT SLIP CLUTCH RH
10.1	4313	SLIP CLUTCH PROTECTION TUBE
10.2	10590084	SCREW, FLANGED BUTTON HEAD, M6 X 10
10.3	4312.A	BUSHING & SPRING STOP
10.4	HM-2812	HEX, BOLT, 8 X 12 G8.8

ITEM	PART NUMBER	DESCRIPTION
10.5	4311	SPRING. SLIP CLUTCH
10.6	4310.2A	CLAW, SLIPCLUTCH, RH
10.7	4309.2B	SPROCKET, 13T, RH
11	4467.G	HEX SHAFT SLIP CLUTCH LH
11.1	4313	SLIP CLUTCH PROTECTION TUBE
11.2	10590084	SCREW, FLANGED BUTTON HEAD, M6 X 10
11.3	4312.A	BUSHING & SPRING STOP
11.4	HM-2812	HEX, BOLT, 8 X 12 G8.8
11.5	4311	SPRING. SLIP CLUTCH
11.6	4310.1A	CLAW, SLIPCLUTCH, LH
11.7	4309.1B	SPROCKET, 13T, LH
12	4655	BEARING AND FLANGE
13	4653	HUB
14	900015.1	WHEEL w/ RIM, 5.90 X 15 TIRE
14.1	G170106152	TIRE, 5.90 x 15 STANDARD
15	4654	SPINDLE, HEX
16	4716	SPACER
17	4656.A	SPROCKET, HEX BORE, 13T
18	10173020	ROLL PIN, 8 X 40
19	301090	ROLL PIN, 5 X 24MM
20	4658.A	ADJUSTABLE DRIVE WHEEL SHIELD
21	10561053	CARRIAGE BOLT, 8 X 18MM
22	NM-1801	NUT, HEX, 8mm, G8.8
23	1277	BOLT, HEX 14 X 30 MM
24	1277.3	LUG NUT, 14 MM
25	NM-0501	NUT, HEX, JAM, 5mm, G8.8
26	HM-61250	HEX, BOLT, 12 X 50, G10.9
27	10629013	WASHER, ET LOCK, 12mm
28	NM-31201	NUT, HEX, 12mm, G8.8
29	4319	IDLER
30	10621056	WASHER, FLAT, 13 X 30 X 6
31	4320	BOLT, CHAIN TENSIONER, 12MM
32	10621055	WASHER, FLAT, 13 X 30 X 5
33	4657.A	CHAIN, 12BR/#60, 66P, W/ CL
34	9658	BUSHING, 12 ID X 18 OD X 25 L
35	10621061	WASHER, FLAT, 13 X 40 X 4

SPRING LOADED ADJUSTABLE DRIVE WHEEL ADJUSTMENTS

Refer to figure 1

A To lower the drive wheel, turn the hand wheel (**1**) counterclockwise.

B To raise the drive wheel, turn the hand wheel (**1**) clockwise.

The spring loaded drive wheel adjustment assembly is intended to act as a "shock absorber " on each drive wheel block. It will allow the drive wheel to flex up and down with variances in the seedbed, yet maintain contact with the soil surface and let the toolbar remain at approximately the proper operating height. To make the drive wheel block rigid, tighten the nylon locknut (**2**) on top of the spring housing all the way down (clockwise). This will compress the spring inside the housing and minimize any upward or downward travel of the wheel block. You may still raise and lower the drive wheel by turning the hand wheel (**1**) in directions **A** and **B** above. The complete assembly may be ordered as part #650610 and includes all items shown in figure 2.

Figure 1

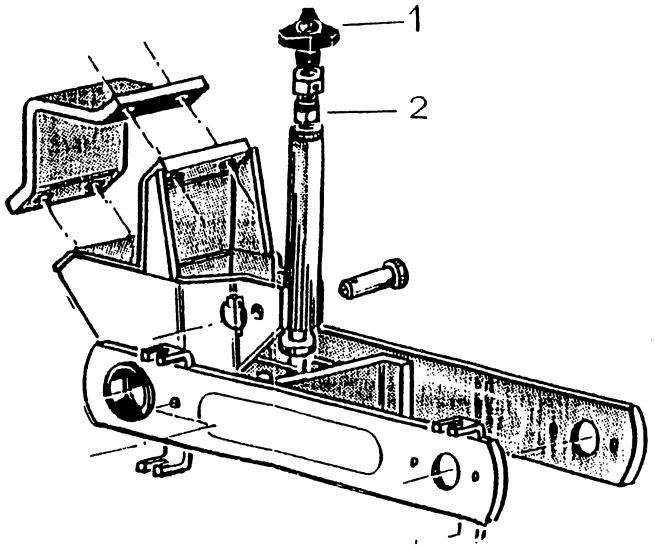

Figure 2

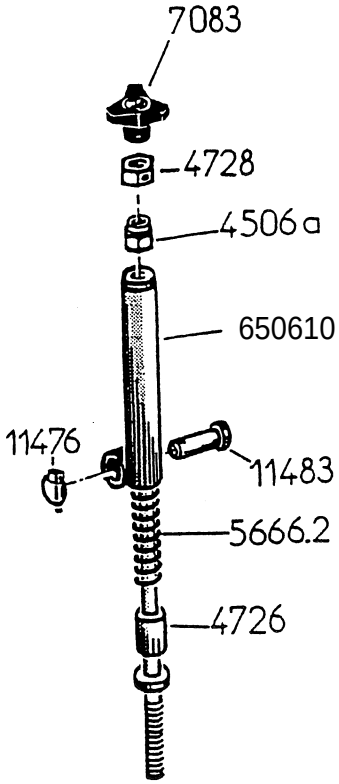

Heavy-duty Adjustable Drive Wheel Block (since 1994)

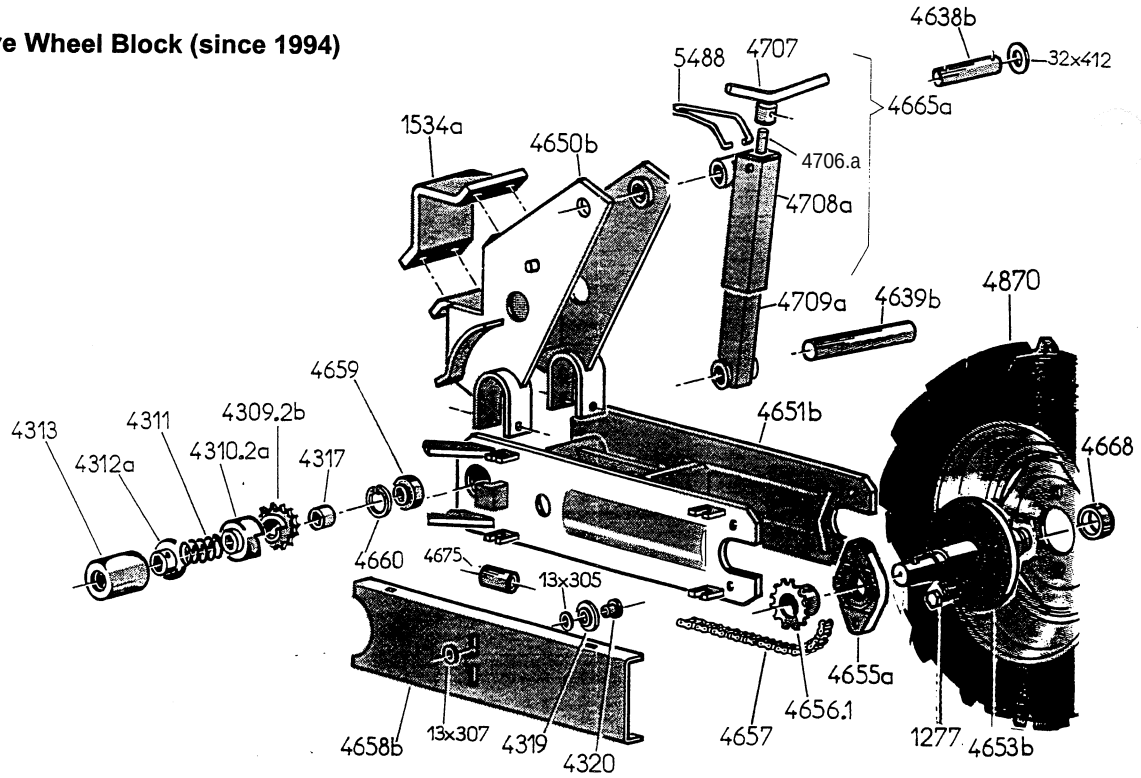

1277	Lug nut and bolt(14mm x 30mm)
1534.a	Counter clamp(120mm wide)
4309.1b	Sprocket slipclutch, lefthand,13 teeth, mates with 4310.1a
4309.2b	Sprocket slipclutch, righthand, 13 teeth, mates with 4310.2a
4310.1a	Claw slipclutch, lefthand(C12A on casting)
4310.2a	Claw slipclutch, righthand(C12B on casting)
4311	Spring for slipclutch
4312.a	Bushing & spring stop (uses 8x12 bolt)
4313	Housing for slipclutch (fastens with 6x10 phillips head screw)
4317	Hex bushing (40mm wide)
4319	Chain tightening idler
4320	Pin for chain tightening idler
4467.D	Clutch assembly complete(w/4309.2b & 4310.2a) RH
4467.G	Clutch assembly complete(w/4309.1b & 4310.1a) LH
4638.b	Upper pin on adjusting crank assembly(30mmx165mm)
4639.b	Lower pin on adjusting crank assembly(30mmx210mm)
4650.b	Mounting frame
4651.b	Wheel support bracket
4653.b	Hub spindle, 4 hole
4655.a	Bearing w/pillow block complete
4655.1a	Bearing only(S208FF ref. #)
4655.2a	Pillow block only(01LCTE 08 marking on cast housing)
4656.1	Rear sprocket, 13T, 1-7/8" wide w/1-3/8" dia. hole, takes a 8x50 rollpin
4657	Chain, 13N (76 links w/conn. Link)
4658.b	Drive chain shield
4659	Bearing (205KRR2 ref. #)
4660	Snapring, internal(52mm)
4665.a	Complete crank assembly
4668	Retaining ring(takes a 8x50 roll pin)
4675	Bushing(16mm ID x 64mm wide)
4706.a	Threaded shaft only
4707	Handle
4708.a	Outer half of adjusting cylinder
4709.a	Inner half of adjusting cylinder
4870	Tire/rim assembly complete
4870.1	Tire only (6.5x80x15 tractor tread)
4870.2	Tube only (6.5x80x15)
4870.3	Rim only (6.5x80x15)
5488	Depth stop
10172069	Roll pin, 5x50
10173022	Roll pin, 8x50
10621055	Washer, 13x30x5
10621056	Washer, 13x30x6
10624016	Washer, 32x41x2

Heavy-duty Adjustable Drive Wheel (prior to 1994)

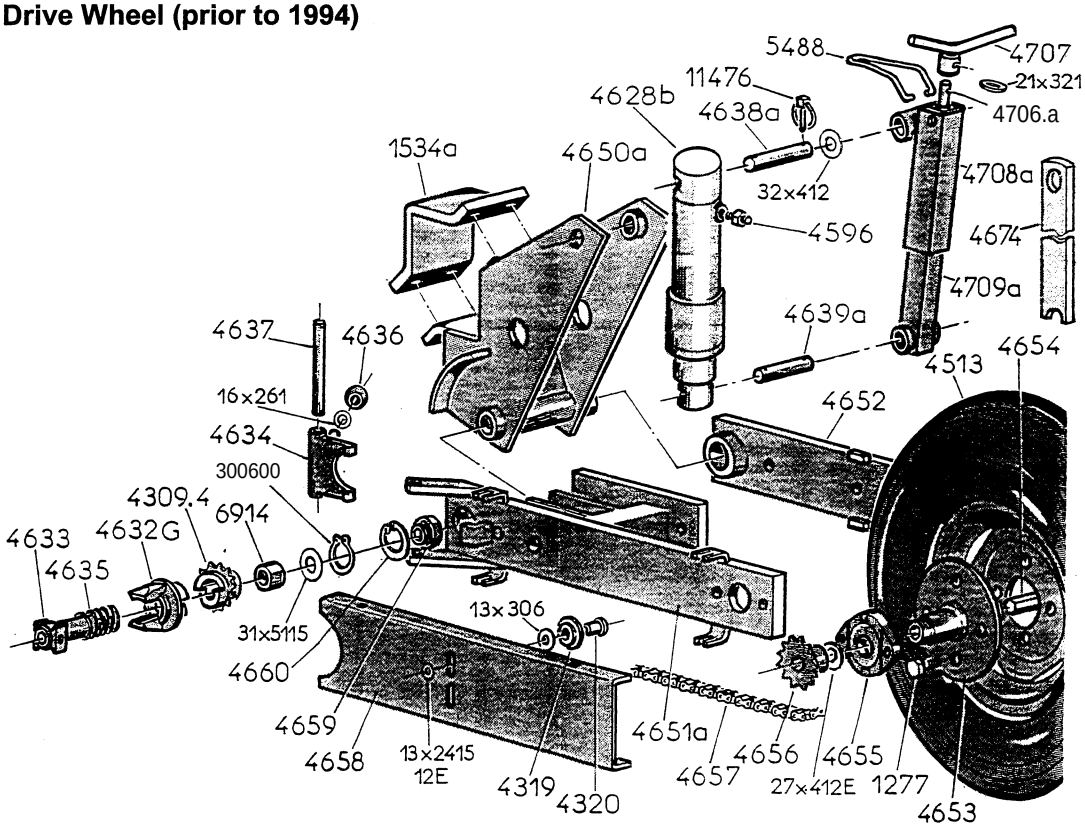

1277	Lug nut and bolt (14mmx30mm)
1534.a	Counter clamp (120mm wide)
4309.3	Sprocket slipclutch, 13 teeth(marked 4309.1b on casting)
4309.4	Sprocket slipclutch, 13 teeth(marked 4309.2b on casting)
4319	Chain tightening idler
4320	Pin for chain tightening idler
4513	Tire & rim assembly complete (7.00x12)
4513.1	Tire only (7.00x12)
4513.3	Rim only
4596	Hydraulic fitting, 12x17/20x1.5(metric to metric)
TA3800-6-6	Hydraulic fitting, metric to 3/8JIC(cylinder to 3/8 american hose)
4628.b	Hydraulic cylinder
4628.1b	Seal kit for cylinder
4632.d	Claw slipclutch (mates with 4309.3)
4632.g	Claw slipclutch (mates with 4309.4)
4633	Bushing stop and spring sleeve
4634	Slipclutch fork
4635	Spring
4636	Fork roller
4637	Fork spindle
4638.a	Upper pin (30mmx210mm)
4639.a	Lower pin (30mmx210mm)
4650.a	Mounting frame
4651.a	Main support frame for wheel
4652	Support arm for wheel frame
4653	Hub, drive wheel
4654	Spindle, hex shaped
4655	Bearing w/pillow block complete
4655.1	Bearing only (S207FF ref. #)
4655.2	Pillow block only (01LCTE 07 marking on cast housing)
4656	Rear sprocket, 13T, 1-7/8" wide, hex bore, takes a 8x40 roll pin
4657	Chain, 13N (76 links w/conn. link)
4658	Drive chain shield
4659	Bearing (205KRR2 ref. #)
4660	Snapring, internal(52mm)
4665.a	Complete crank assembly
4674	Locking arm
4706.a	Threaded shaft only
4707	Handle
4708.a	Outer half of adjusting cylinder
4709.a	Inner half of adjusting cylinder
5488	Depth stop
6914	Bushing, self lubricated
300600	Snapring, internal(30mm)
11476	Lynch pin, 9mm dia.
10629013	External tooth locking washer, 12x20
10173020	Roll pin, 8x40
10621031	Washer, 13x24x1.5
10621056	Washer, 13x30x6
10622024	Washer, 16.5x26x1.5
10623009	Washer, 21x32x1
10624016	Washer, 31x41x2
10624024	Washer, 31x51x1.5
10629031	Washer, 27x41x2 w/hex bore

7x7 Adjustable Drive Wheel Blocks

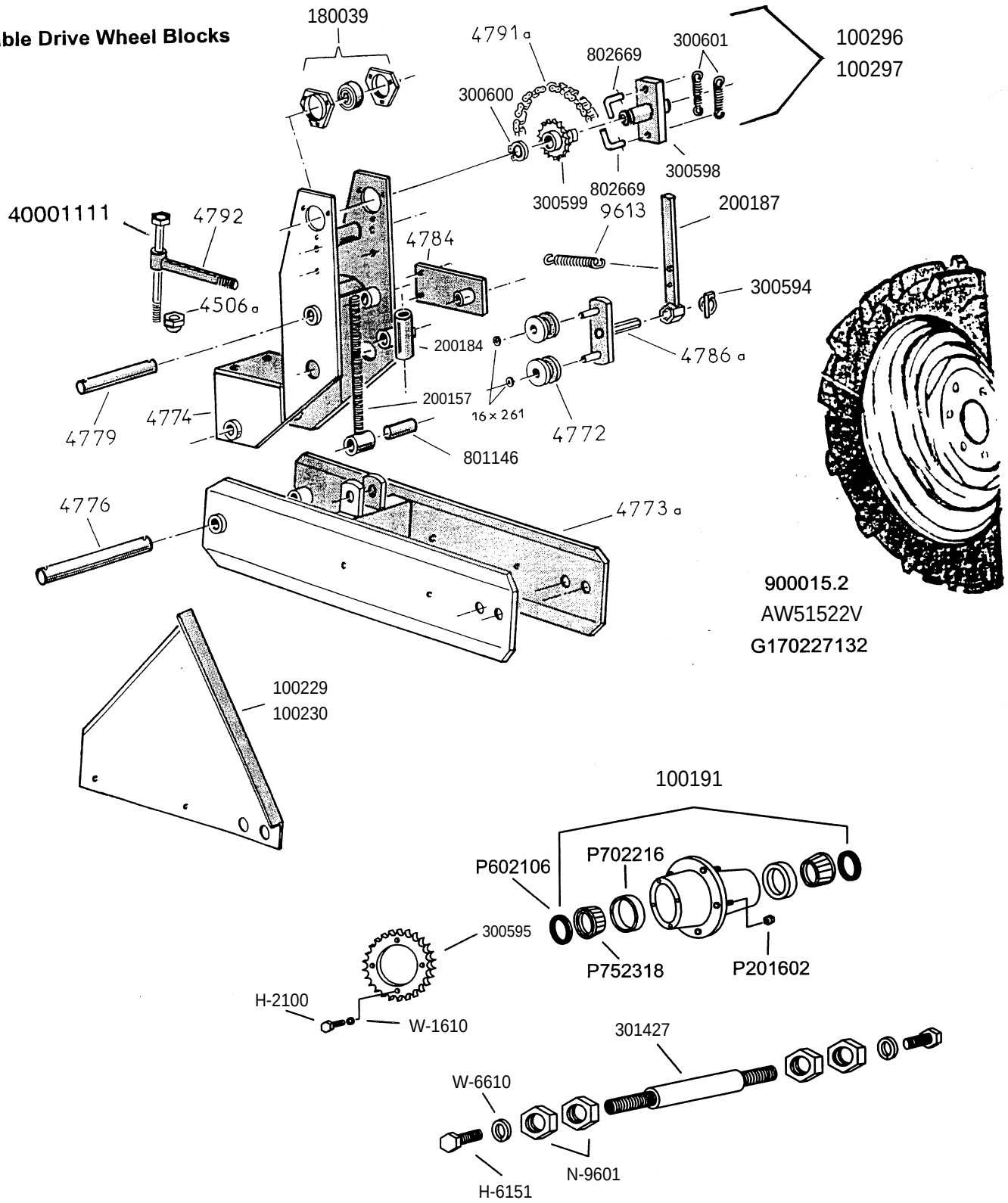

7x7 Adjustable Drive Wheel Blocks

4506.a	20mm nylon locknut
180039	Bearing complete w/flangettes
300597	Bearing only (205KRRB2 ref. #, 7/8" hex bore)
300596	Flangettes(2), 3 bolt hole
4772	Chain roller
4773.a	Support frame
4774	Upper clamp housing
200157	Threaded rod, 24mm
4776	Front pin(30x335mm), takes 6x50 roll pin
200184	Cross sleeve for threaded rod
801146	Pin for threaded rod(25x95mm) takes 6x70 roll pin
4779	Upper clamp pin(25x215mm) takes 6x35 roll pin
300595	Drive sprocket, 26 tooth
100229	Shield, right
100230	Shield, left
4784	Bracket, for idler assembly
4786.a	Chain tightener
200187	Handle, chain tightener
300598	Slipclutch block
802669	L-pin
300599	Sprocket in safety clutch, 22 tooth
100296	Right clutch assembly complete
100297	Left clutch assembly complete
4791.a	Drive chain, #50(72 links w/conn. link)
4792	Bolt w/sleeve head, 20mm
40001111	Bolt, 20x230
300601	Spring, slipclutch
300600	Snapring, internal(30mm)
300594	Lynch pin, 6mm
9613	Spring, chain tightener
100191	Hub assembly
301427	Spindle
AW51522	Rim only
G170227132	Tire only (7.60x15)
900015.2	Tire & rim assembly (7.60x15)
P201602	Lug nut (1/2-20)
P602106	Grease seal
P702216	Cup only, for bearing cone
P752318	Bearing cone (14136A ref #)
H-2100	Bolt, 5/16x1
H-6151	Bolt, 3/4x1-1/2
W-1610	Lock washer, 5/16
W-6610	Lock washer, 3/4
N-9601	Jam nut, 1-1/4
10172092	Roll pin, 6x35
10172095	Roll pin, 6x50
10172099	Roll pin, 6x70
10622024	Washer, 16.5x26x1

7 x 7 Wheel Block

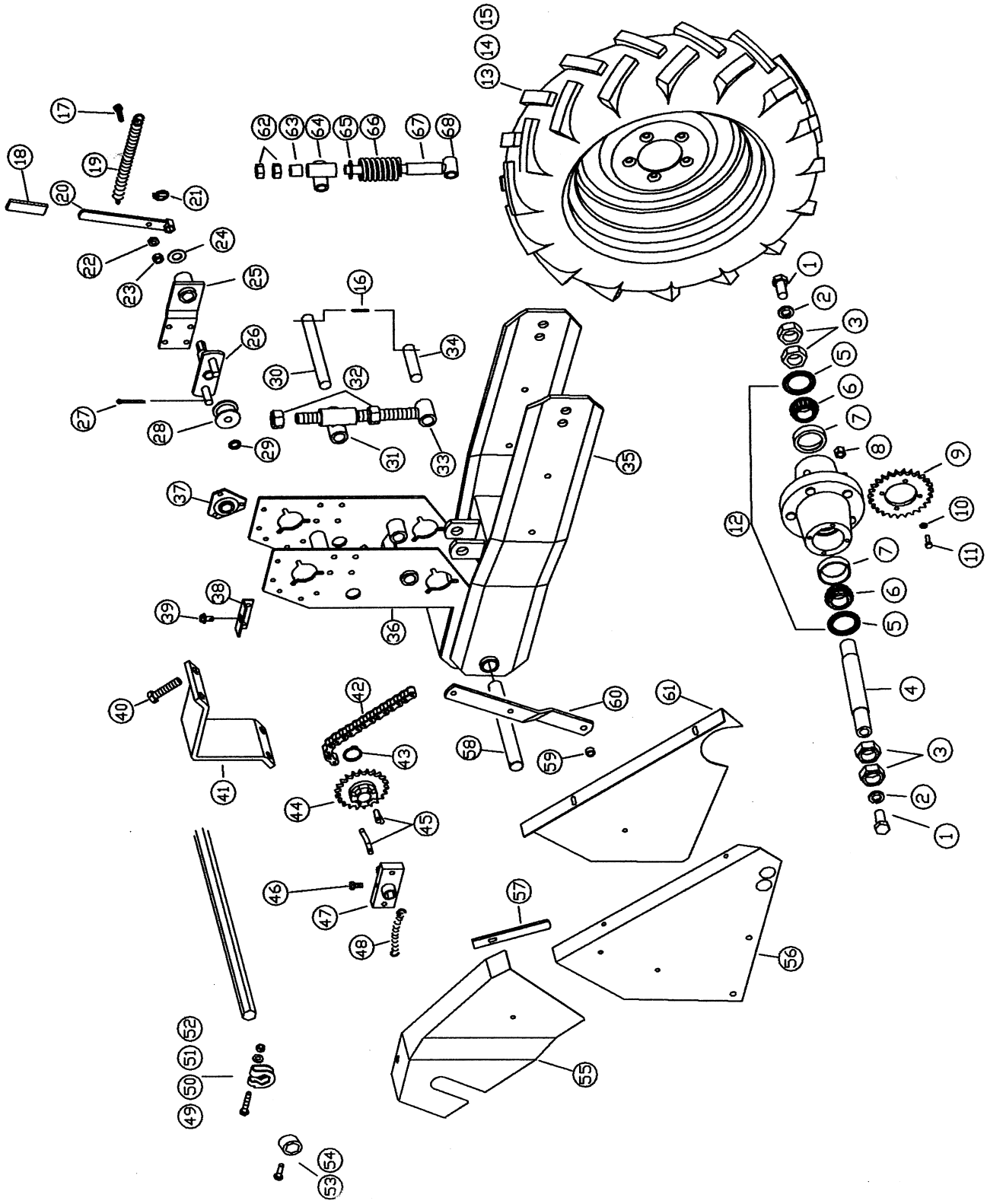

7 x 7 Wheel Block

Item	Part #	Description
1	H-6151	Hex head bolt, 3/4-10 x 1-1/2", Gr.8
2	W-6610	Lock washer, 3/4"
3	N-9600	Jam nut, 1-1/4-12
4	301427	Spindle
5	P602106	Grease seal
6	P752318	Tapered roller bearing (Peer 14136A)
7	P702216	Cup for tapered roller bearing
8	P201602	Lug nut, 1/2-20
9	300595	Drive Sprocket, 26 tooth, #50
10	W-1610	Lock washer, 5/16"
11	H-2100	Hex head bolt, 5/16-18 x 1", Gr.5
12	100191	Hub assembly (Hub and items 5-8)
13	G170227132	Tire only, 7.60 x 15, 6ply
14	AW51522V	Rim only, 5 x 15 w/valve guard
15	900015.2	Tire assembly (items 13 & 14)
16	10172095	Roll pin, 6 x 50
	10172093	Roll pin, 6 x 40
17	HM-41035	Hex head bolt, 10 x 35
18	300593	Plastic cover for handle
19	300591	Spring
20	200187	Handle, chain tightener
21	300594	Lynch pin
22	NM-21011	Nut, 10mm
23	NM-21015	Nylon locknut, 10mm
24	10623028	Washer, 21x40x2
25	200185	Idler support bracket
26	200186	Idler bracket
27	10170067	Cotter pin, 5 x 40
28	300592	Idler roller
29	10622026	Washer, 16.5x26x2
30	4779	Upper pin, 25mm x 215mm
31	200184	Bushing tee
32	NM-82401	Nut, 24mm
33	200157	Threaded rod, 24mm
34	801146	Lower pin, 25mm x 103mm
35	4773.B	Tapered wheel mounting frame
36	4774.1	Wheel unit bracket
37	300597	Bearing only, hex bore (205KRRB2)
	300596	Flange
38	200466	Bracket for shield mounting
39	9724.2	Keeper bolt for shield
40	HM-81670	Hex head bolt, 16 x 70
41	4882	Clamp facing, 7x7
42	4791.A	Drive chain, #50, 130 links w/conn link
43	300600	Snapring, external (30mm)
44	300599	Sprocket, slipclutch (22 teeth)
45	802669	L pin, for slipclutch
46	HM-41020	Hex head bolt, 10 x 20

Item	Part #	Description
47	300598	Slipclutch block
48	300601	Spring
	10170067	Cotter pin, 5 x 40
49	4523.1	Narrow hex shaft stop, complete
50	HM-2850	Hex head bolt, 8 x 45
51	10620064	Washer, 8.5x16x2
52	NM-1801	Nut, 8mm
53	HM-41015	Hex head bolt, 10 x 15
54	4523	Bushing stop
55	802100	Left hand upper chain guard (shown)
	802099	Right hand upper chain guard
56	100230	Left hand lower chain guard (shown)
	100229	Right hand lower chain guard
57	802142	Shield guide bar
58	4776.A	Front pin, 30mm x 260mm
59	1538	Spacer bushing, 12x18x10mm wide
60	802137	Shield mounting brace
61	802098	Lower left inside chain guard (shown)
	802097	Lower right inside chain guard
62	NM-82401	Nut, 24mm
63	900419	Spacer bushing, 1-1/4" long
64	200184	T bushing
65	W-7410	Washer, 1" SAE
66	900318.A	Spring, 5" long
67	900420	Spacer bushing, 4" long
68	4775.S	Threaded rod, 24mm x 248mm long

100296	Safety clutch, RH, complete (items 43 thru 48)
100297	Safety clutch, LH, complete (items 43 thru 48)
900242	Complete hub assembly (items 3, 4, 9, & 12)

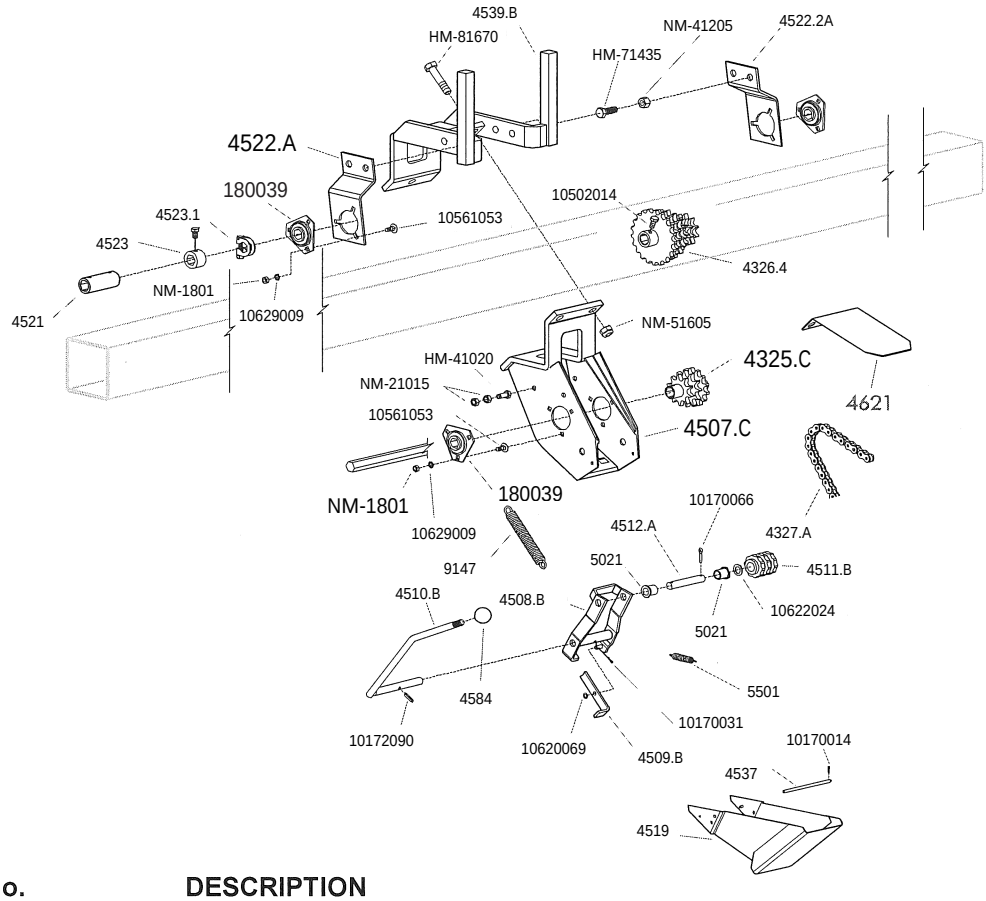

PART No.	DESCRIPTION
4325.c	Lower Three Sprocket Cluster (10-12-14 Tooth)
4326.4	Upper Three Sprocket Cluster (17-19-21 Tooth for Narrow Application)
4326.2d	Upper Three Sprocket Cluster (10-11-13 Tooth for Narrow Application)
4326.4	Standard 6-Tooth Upper Sprocket Cluster (10-11-13-17-19-21 Tooth)
4327.a	Drive Chain (13N, 36 links w/conn. Link)
4507.c	Gearbox Housing
4508.1	Lever (for Narrow Spacing)
4508.b	Gearbox Lever - Standard
4509.b	Lever Lock
4510.b	Gearbox Handle
4511.b	Chain Tightener Roller (with 5021 Bushing)
4512.a	Pin
180039	Bearing Complete with Flangettes
300597	Bearing Only (205KRRB2, 7/8 Hex Bore)
300596	Flangette(2 required)
4519	Gearbox Door
4521	Hex shaft coupler
4523	Stop bushing w/bolt
4523.1	Lock collar w/cross bolt
4522.1a	Left Support Bracket (for Hex Shaft)
4522.2a	Right Support Bracket (for Hex Shaft)
4537	Pin for Gearbox Door
4539.1b	Gearbox Mtg Bracket without Turbofan Stand
4539.b	Gearbox Mtg Bracket with Turbofan Stand

4621	Shield, Gearbox
4584	Knob for Handle
5021	Bushing (Self Lubricating, B25)
5501	Spring, Gearbox Door
9147	Spring, for Tightening Drive Chain
NM-21015	10mm nylon lock nut
NM-41205	14mm nylon lock nut
NM-51605	16mm nylon lock nut
NM-1801	8mm nut
HM-41020	10 x 20 Bolt
HM-71435	14 x 35 Bolt
HM-81670	16 x 70 Bolt
10561053	8 x 18 Carriage Bolt
10629009	8mm External tooth lockwasher
10620069	Washer, 8.5x20x1.5
10622024	Washer, 16.5x26x1
10170014	Cotter pin 2.5x20
10170031	Cotter pin 3.5x25
10170066	Cotter pin 5x35
10172090	Roll pin 6x25

7 x 7 Transmission

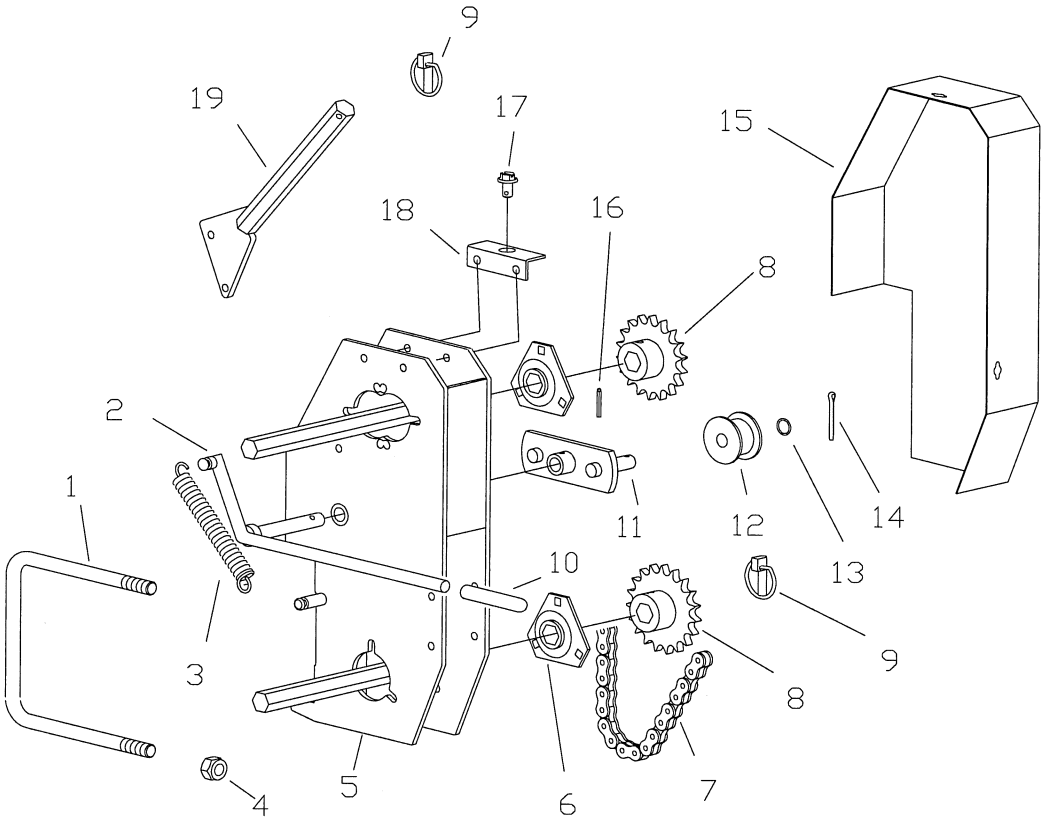

Item	Part #	Description
1	4502.S	U Bolt, 7 x 7, 5/8-11
2	4798.G	Lever, right side (shown)
	4798.D	Lever, left side
3	9147	Spring
4	N-5101	Nylon locknut, 5/8-11
5	4797.B	Gearbox frame
6	180039	Bearing complete with flanges
	300597	Bearing only, hex bore (205KRRB2)
	300596	Flange
7	4795.A	Drive chain, #50, 72 links w/conn link
8	G50B14	Sprocket, 14 tooth, #50 (standard)
	G50B15	Sprocket, 15 tooth, #50
	G50B17	Sprocket, 17 tooth, #50 (standard)
	G50B18	Sprocket, 18 tooth, #50
	G50B19	Sprocket, 19 tooth, #50 (standard)
	G50B21	Sprocket, 21 tooth, #50
	G50B23	Sprocket, 23 tooth, #50 (standard)
	G50B24	Sprocket, 24 tooth, #50 (standard)
	G50B25	Sprocket, 25 tooth, #50
	G50B26	Sprocket, 26 tooth, #50 (standard)
	G50B27	Sprocket, 27 tooth, #50
	G50B28	Sprocket, 28 tooth, #50 (standard)
	G50B30	Sprocket, 30 tooth, #50

Item	Part #	Description
9	6077	Lynch pin, 6mm
10	4895	Plastic cover for lever
11	200476	Idler bracket
12	4772	Idler roller
13	10622026	Washer, 16.5x26x2
14	10170067	Cotter pin, 5 x 40
15	5128.D	Chain guard, right side (shown)
	5128.G	Chain guard, left side
16	10172090	Roll pin, 6 x 25
17	9724.2	Keeper bolt for shield
18	200466	Bracket for guard mounting
19	800446	Storage rod for sprockets

7 x 7 Single Plate Transmission
Stacker Bar

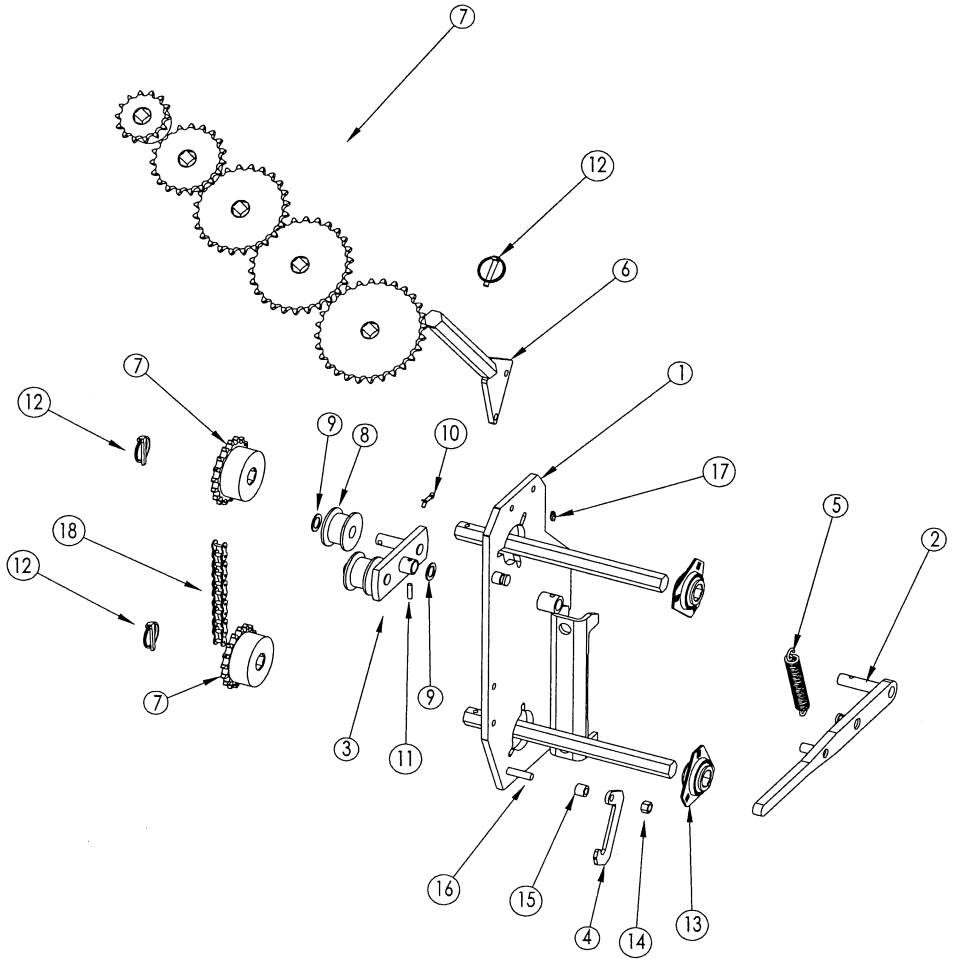

ITEM	PART No.	DESCRIPTION
1	E6001.1L	Plate L.H. (shown)
	E6001.1R	Plate R.H.
2	800238	Handle
3	4796.A	Idler bracket
4	800237	Hook
5	4334	Spring
6	4793.A	Storage rod for sprockets
7	G50B14	Sprocket, 14 tooth, #50 (std.)
	G50B15	Sprocket, 15 tooth, #50
	G50B17	Sprocket, 17 tooth, #50 (std.)
	G50B18	Sprocket, 18 tooth, #50
	G50B19	Sprocket, 19 tooth, #50 (std.)
	G50B21	Sprocket, 21 tooth, #50
	G50B23	Sprocket, 23 tooth, #50 (std.)
	G50B24	Sprocket, 24 tooth, #50 (std.)
	G50B25	Sprocket, 25 tooth, #50
	G50B26	Sprocket, 26 tooth, #50 (std.)
	G50B27	Sprocket, 27 tooth, #50
	G50B28	Sprocket, 28 tooth, #50 (std.)
	G50B30	Sprocket, 30 tooth, #50

ITEM	PART No.	DESCRIPTION
8	KD0916	Idler roller
9	10622024	Washer M16.5 X 26 X 1
10	10170067	Cotter pin M5 X 40
11	10172090	Roll pin M6 X 25
12	6077	Lynch pin M6
13	4515	Bearing w/flangettes
	4515.1	Bearing only (205KRRB2)
	4515.2	Flangette only (2 req'd)
	CB-1110	Carriage bolt, 5/16-18 X 1"
	W-1410	Washer, 5/16" SAE
	W-1610	Lock washer, 5/16"
	N-1001	5/16 Hex nut
14	N-2101	Nylock nut 3/8"
	W-2210	Washer, 3/8" USS
15	KD2971-10	Bushing
16	H-3130	Hex bolt 3/8-16 X 1 3/4"
17	F60102	Grease zerk 1/8" NPT
18	4795.A	Chain #50 X 72 pitch
	E6000	Transmission complete

PULL TYPE TRANSMISSION

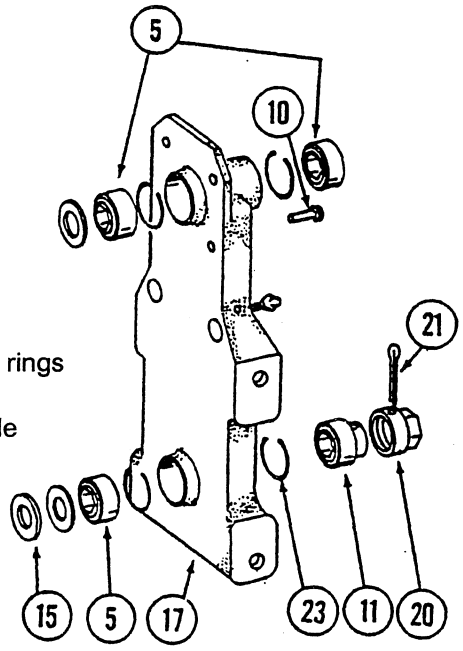

Main Transmission Housing

Item	Part No.	Description
15	K10233	Machine bushing, (1" ID x 1-1/2" OD)
17	KA5629	Transmission plate w/bearings, grease fitting and retaining rings
5	KA5116	Bearing, 7/8" hex bore, cylindrical
11	KA5624	Bearing, 7/8" hex bore, extended sleeve w/cross drilled hole
23	KD6551	Retaining ring
	K10640	Grease fitting, 1/4"-28
20	KD7127	Shear coupler
21	F65127	Cotter pin, 3/16" x 2"
10	K10478	Clevis pin, 5/16" x 1"
	K10409	Retaining ring, 5/16"

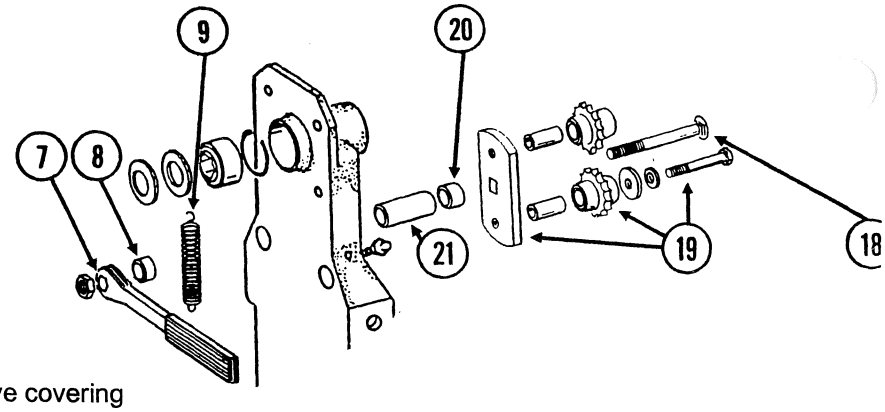

Chain Idler Assembly

Item	Part No.	Description
7	KA4235	Ratchet wrench w/protective covering
	K10445	Protective covering(on handle)
8	KD10161	Spacer, 3/8"
9	KD5857	Spring
18	F21573	Carriage bolt, 1/2"x 5"
	K10111	Lock nut, 1/2"
19	KA7336	Idler w/bolt-on sprockets
	KD7426	Plastic sprocket
	KD1026	Spacer, 1-3/16"
	K10210	Washer, 3/8"
	W-2610	Lock washer, 3/8"
	K10047	Bolt, 3/8" x 1-3/4"
20	KD2734-01	Sleeve, 1/2" wide
21	KD3180-16	Sleeve, 2-13/15" wide
25	K10670	Hair pin clip, #3
26	KD6819	Sleeve, 7/16" wide
27	KA5628	Idler w/sprockets and retaining rings
	KD7426	Plastic sprocket
	K10435	Retaining ring

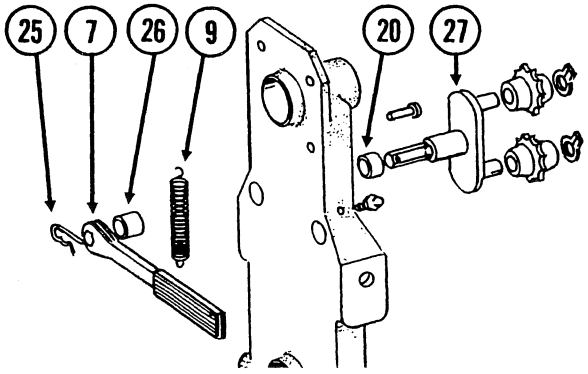

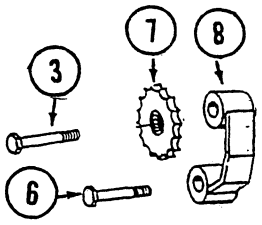

Style A

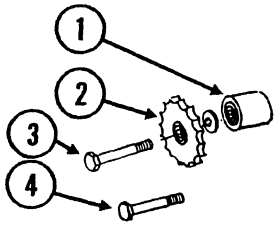

Style B

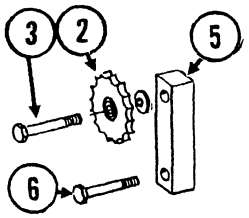

Style C

Chain Tightener Assembly

Item	Part No.	Description
1	KB0259	Spacer, 1"
2	KA7154	Sprocket w/bearing, 18 tooth, #40 chain (replaces KA5103) on **4 thru 12 row** machines
2 & 7	G5015E	Sprocket w/bearing, 15 tooth, #50 chain on **16 thru 24 row** machines
3	K10033	Bolt, 1/2" x 3-1/2"
4	K10039	Bolt, 1/2" x 1-3/4"
5	KD12571	Spacer block, 1" x 4"
6	K10053	Bolt, 1/2" x 2-1/2"
7	KA5103	Sprocket w/bearing, 15 tooth(replaced by KA7154)
8	KA7156	Sprocket mount bracket
	K10102	Nut, 1/2"
	K10228	Lock washer, 1/2"
	K10128	Machine bushing, 1/2"ID x 7/8"OD

Style A has been replaced by Styles B and C. In doing so, you must increase the length of the #40 chain by 3 links(from 89 to 92).

Transmission Assembly, 4 thru 12 row, w/#40 Chain

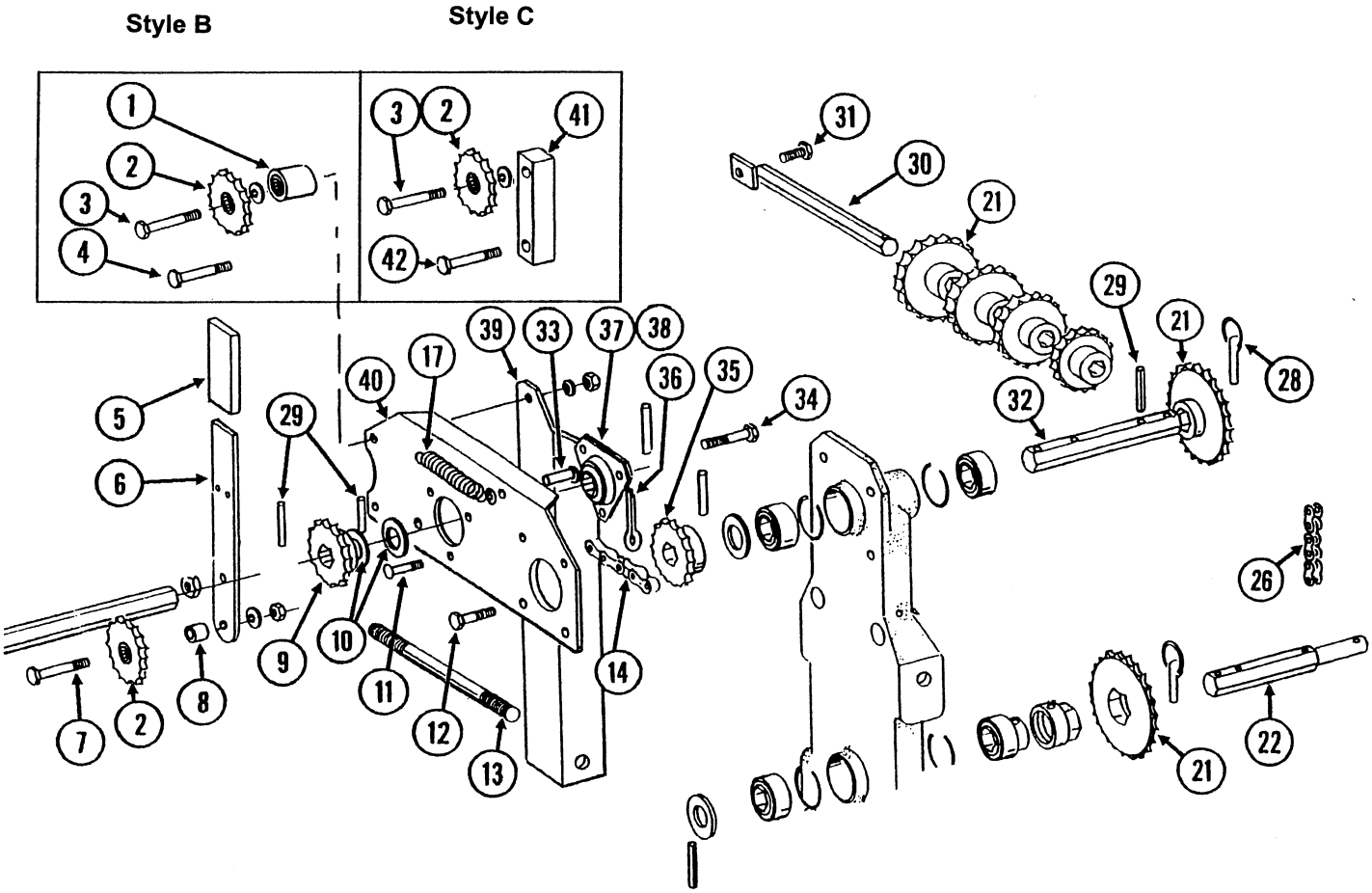

Transmission Assembly, 4 thru 12 row, w/#40 Chain

Item	Part No.	Description
1	KB0258	Spacer, 1"
2	KA7154	Sprocket w/ bearing, 18 tooth
3	K10033	Bolt, 1/2" x 3-1/2"
4	K10039	Bolt, 1/2" x 1-3/4"
	K10128	Machine bushing, 1/2"ID x 7/8"OD
	K10228	Lock washer, 1/2"
	K10102	Nut, 1/2"
5	KD5827	Cover for arm
6	KD5829	Arm
7	K10053	Bolt, 1/2" x 2-1/2"
8	KD4887-01	Sleeve, 1/2"ID x 5/8" long
9	KA5105	Sprocket, 15 tooth, #40
10	K10233	Machine bushing, 1"ID x 1-1/2"OD, 1/8" thick
11	K10303	Carriage bolt, 5/16" x 1"
	K10232	Lock washer, 5/16"
	K10106	Nut, 5/16"
12	K10037	Bolt, 1/2" x 1-1/4"
13	KD6793	Stud bolt, 5/8" x 9-1/2"(threaded both ends)
	K10230	Lock washer, 5/8"
	K10107	Lock nut, 5/8"
14	K3310-92	Chain, #40, 92 links(w/conn. link)
21	KA5105	Sprocket, 15 tooth, #40
	KA5106	Sprocket, 17 tooth, #40(standard)
	KA5107	Sprocket, 19 tooth, #40(standard)
	KA5108	Sprocket, 23 tooth, #40(standard)
	KA5109	Sprocket, 24 tooth, #40(standard)
	KA5110	Sprocket, 25 tooth, #40(standard)
	KA5111	Sprocket, 26 tooth, #40(standard)
	KA5112	Sprocket, 27 tooth, #40(standard)
	KA5113	Sprocket, 28 tooth, #40(standard)
	KA5114	Sprocket, 30 tooth, #40
22	KD7822	Shaft, 7/8" x 7"
26	K3310-80	Chain, #40, 80 links(w/conn. link)
28	6077	Lynch pin, 1/4"
29	F64251	Roll pin, 1/4" x 1-1/2"
30	KA5146	Sprocket storage rod
31	K10017	Bolt, 1/2" x 1-1/2"
32	KD5835	Shaft, 7/8" x 7"
33	K10478	Clevis pin, 5/16" x 1"
	K10409	Retaining ring, 5/16"
34	K10001	Bolt, 3/8" x 1"
	KD5756	Special nut, 3/8"
35	KA5107	Sprocket, 19 tooth, #40
36	K10460	Cotter pin, 1/4" x 2"
37	300597	Bearing only (205KRRB2 ref. #, 7/8" hex bore)
38	300596	Flangette, 3 bolt hole
39	KD5830	Angle support, RH
	KD5831	Angle support, LH
40	KD5824	Plate, RH
	KD5825	Plate, LH
41	KD12571	Spacer block, 1" x 4"
42	K10053	Bolt, 1/2" x 2-1/2"

Transmission Assembly, 16 thru 24 row, w/#50 Chain

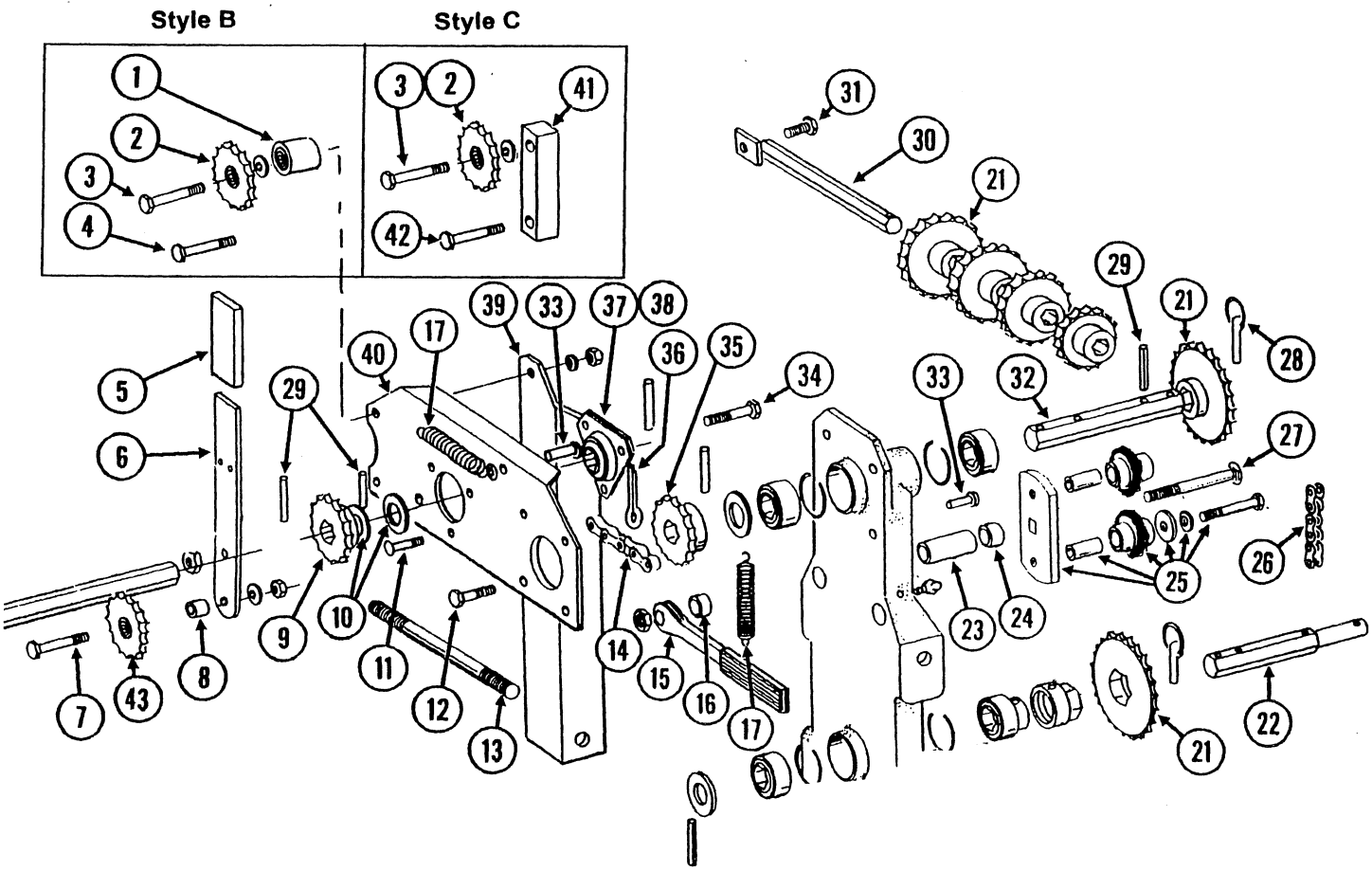

Transmission Assembly, 16 thru 24 row, w/#50 Chain

Item	Part No.	Description
1	KB0259	Spacer, 1"
2	G5015E	Sprocket w/bearing, 15 tooth
3	K10033	Bolt, 1/2" x 3-1/2"
4	K10039	Bolt, 1/2" x 1-3/4"
	K10128	Machine bushing, 1/2"ID x 7/8"OD
	K10228	Lock washer, 1/2"
	K10102	Nut, 1/2"
5	KD5827	Cover for arm
6	KD5829	Arm
7	K10053	Bolt, 1/2" x 2-1/2"
8	KD4887-01	Sleeve, 1/2"ID x 5/8" long
9	G50B15	Sprocket, 15 tooth, #50
10	K10233	Machine bushing, 1"ID x 1-1/2"OD, 1/8" thick
11	K10303	Carriage bolt, 5/16" x 1"
	K10232	Lock washer, 5/16"
	K10106	Nut, 5/16"
12	K10037	Bolt, 1/2" x 1-1/4"
13	KD6793	Stud bolt, 5/8" x 9-1/2"(threaded both ends)
	K10230	Lock washer, 5/8"
	K10107	Lock nut, 5/8"
14	900144	Chain, #50, 78 links(w/conn. link)
15	KA4235	Ratchet wrench w/protective covering
	K10445	Protective covering(on arm)
16	KD10161	Spacer, 3/8"
17	KD5857	Spring
21	G50B14	Sprocket, 14 tooth, #50
	G50B15	Sprocket, 15 tooth, #50
	G50B17	Sprocket, 17 tooth, #50(standard)
	G50B18	Sprocket, 18 tooth, #50
	G50B19	Sprocket, 19 tooth, #50(standard)
	G50B21	Sprocket, 21 tooth, #50(standard)
	G50B23	Sprocket, 23 tooth, #50(standard)
	G50B24	Sprocket, 24 tooth, #50(standard)
	G50B25	Sprocket, 25 tooth, #50(standard)
	G50B26	Sprocket, 26 tooth, #50
	G50B27	Sprocket, 27 tooth, #50(standard)
	G50B28	Sprocket, 28 tooth, #50(standard)
	G50B30	Sprocket, 30 tooth, #50(standard)
22	KD7822	Shaft, 7/8" x 7"
23	KD3180-16	Sleeve, 5/8"ID x 7/8"OD x 2-13/16" long
24	KD2734-01	Sleeve, 1-1/4"OD x 1/2" long
25	4319	Chain idler roller
	KD1026	Sleeve, 1-3/16" long
	K10210	Washer, 3/8"
	W-2610	Lock washer, 3/8"
	K10047	Bolt, 3/8" x 1-3/4"
26	900143	Chain, #50, 72 links(w/conn. link)
27	K10867	Carriage bolt, 1/2" x 5"
	K10111	Lock nut, 1/2"
28	6077	Lynch pin, 1/4"
29	F64251	Roll pin, 1/4" x 1-1/2"
30	4793	Sprocket storage rod
31	K10017	Bolt, 1/2" x 1-1/2"
32	KD5835	Shaft, 7/8" x 7"
33	K10478	Clevis pin, 5/16" x 1"
	K10409	Retaining ring, 5/16"
34	K10001	Bolt, 3/8" x 1"
	KD5756	Special nut, 3/8"
35	G50B19	Sprocket, 19 tooth, #50
36	K10460	Cotter pin, 1/4" x 2"
37	300597	Bearing only (205KRRB2 ref. #) 7/8" hex bore
38	300596	Flangette, 3 bolt hole
39	KD5830	Angle support, RH
	KD5831	Angle support, LH
40	KD5824	Plate, RH
	KD5825	Plate, LH
41	KD12571	Spacer block, 1" x 4"
42	K10053	Bolt, 1/2" x 2-1/2"
43	G5013E	Sprocket w/bearing, 13 tooth

MICROSEM ASSEMBLY

Microsem transmission

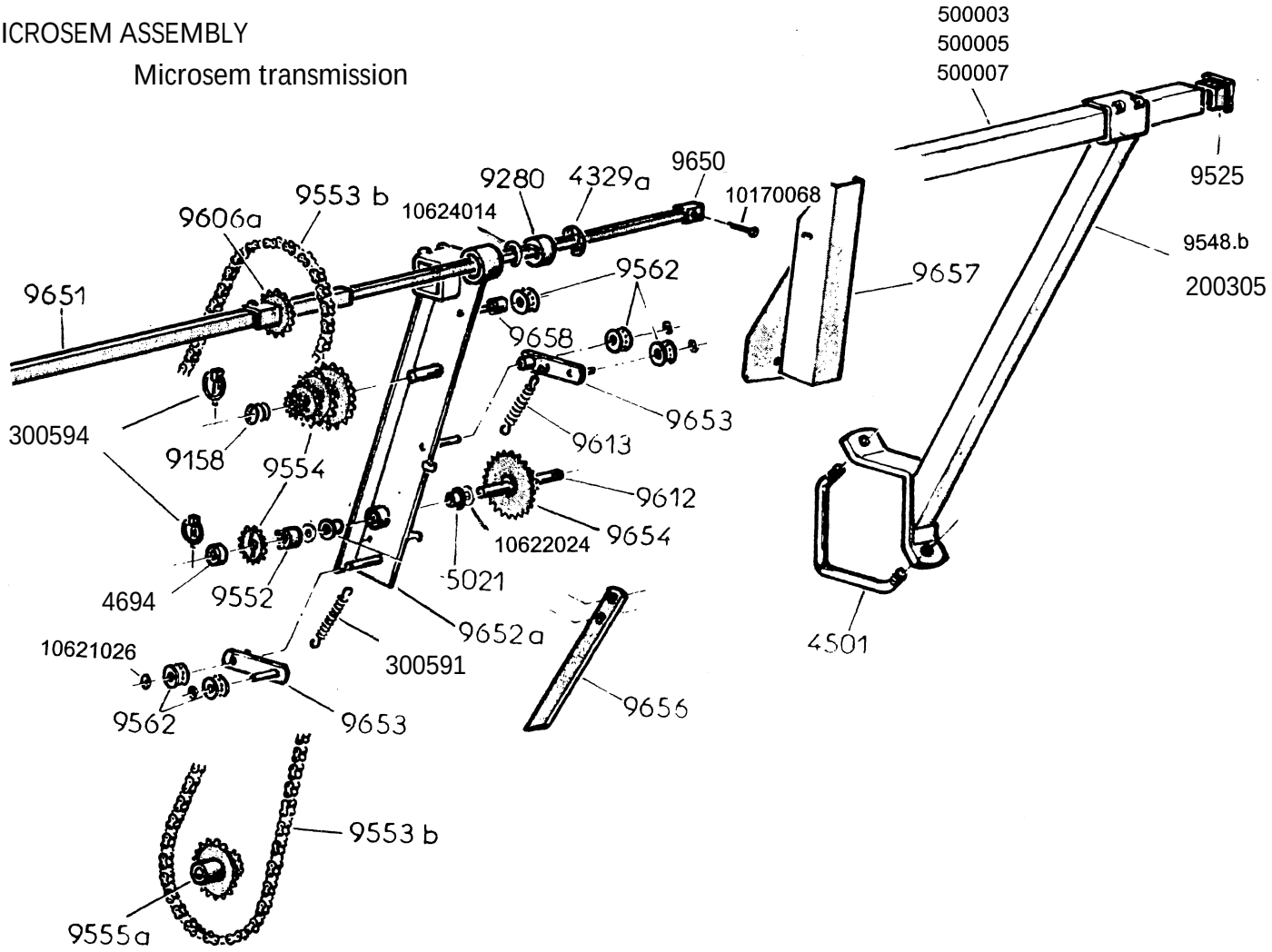

4329.a	Snapring
4501	V-bolt, 16mm
5021	Self lubricated bushing
9158	Spring (holds on extra sprockets)
9280	Bushing, nylon w/square hole
9500.a	Housing(half), metering unit (replaces old 9500 & 9501 left & right sides)
9525	End cap for bar
9548.b	Support bar(for mounting to a 5x5 bar)
200305	Support bar(for mounting to a 7x7 bar)
500003	Carrier bar, 8' 2" long(1-1/2" square)
500005	Carrier bar, 11' 6" long(1-1/2" square)
500007	Carrier bar, 14' 9" long(1-1/2" square)
9552	Bushing, requires 2-4x25 & 1-6x30 roll pin
9553.b	Chain, 5R(110 links w/conn. link)
9554.3	Sprocket, 12 tooth, 5R(standard)
9554.4	Sprocket, 13 tooth, 5R
9554.5	Sprocket, 14 tooth, 5R
9554.6	Sprocket, 15 tooth, 5R(standard)
9554.7	Sprocket, 16 tooth, 5R
9554.9	Sprocket, 18 tooth, 5R(standard)
9554.11	Sprocket, 20 tooth, 5R
9554.13	Sprocket, 22 tooth, 5R(standard)
9554.16	Sprocket, 25 tooth, 5R(standard)
9554.21	Sprocket, 30 tooth, 5R(standard)
9554.26	Sprocket, 35 tooth, 5R
9555.a	Double sprocket, 12-25 tooth, 5R(hex bore)
300594	Lynch pin, small(6mm)
4694	Bushing (17mmID x 25mmOD, 10mm long)
9562	Chain roller
9606.a	Sprocket, 20 tooth, 5R, top drive shaft(square)
9612	Intermediate shaft(has 3 holes,2 for 6x30 roll pins)
300591	Spring, for chain tightener
9650.085	Drive shaft(inner), 33-1/2" long
9651.085	Drive shaft(outer), 33-1/2" long
9651.12	Drive shaft(outer), 47" long
642500	Complete drive shaft(33-1/2" & 47")
642502	Complete drive shaft(both 33-1/2")
9652.a	Main support bracket for drive
9653	Chain tightener
9654	Double sprocket, 12-20 tooth, 5R, intermediate shaft
9656	Support arm (for drive frame)
9657	Shield for drive chain
9658	Bushing (12mmID x 19mmOD, 24mm long)
10170068	Cotter pin, 5 x 45
10172041	Roll pin, 4 x 25
10172091	Roll pin, 6 x 30
10621026	Washer, 13 x 18 x 2
10622024	Washer, 16 x 26 x 1
10624014	Washer, 31 x 41 x 1

MICROSEM TRANSMISSION-TWIN ROW

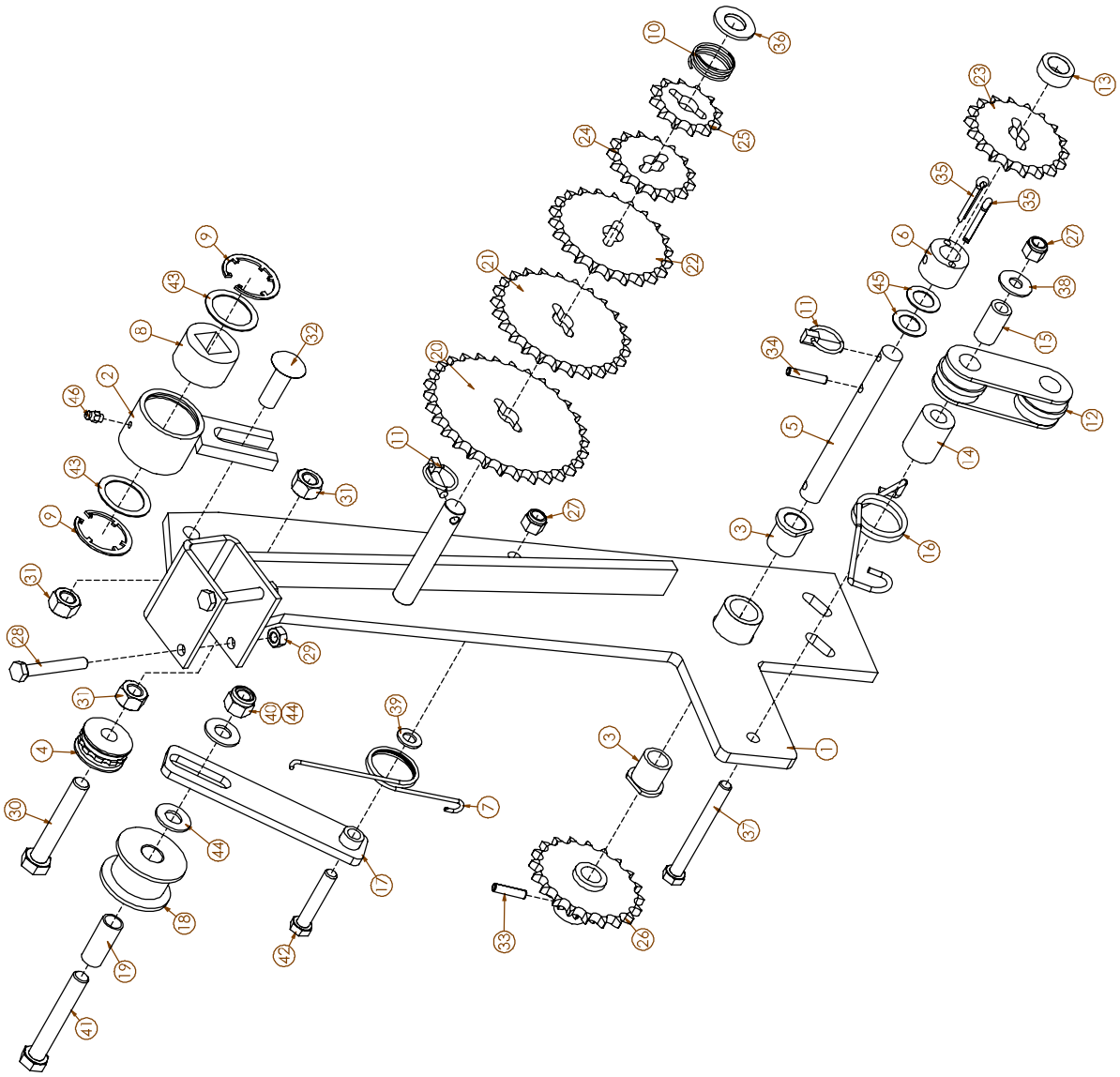

MICROSEM TRANSMISSION-TWIN ROW

ITEM NO.	QTY.	PART NUMBER	DESCRIPTION
1	1	200226	MICROSEM FRAME WA
2	1	200581	HOUSING WA
3	2	5021	SELF LUBRICATING BUSHING
4	1	9562	CHAIN ROLLER
5	1	9612	INTERMEDIATE SHAFT MICROSEM DR
6	1	9552	SPACER INTERCHANGEABLE SPROCKET
7	1	7157	LATERAL TIGHTENER SPRING
8	1	9280	SUPPORT BUSHING DRIVE
9	2	4329.A	SNAP RING
10	1	9158	PRESSURE SPRING
11	2	9557	LYNCH PIN
12	1	KD11962	IDLER, #41 CHAIN
13	1	9559	BUSHING, 17 X 25 X 10mm
14	1	E2003	SPACER
15	1	KD1026	BUSHING, .625" X 1.188"
16	1	7150	PRESSURE SPRING
17	1	200229	IDLER ARM WA
18	1	KD0916	CHAIN ROLLER
19	1	E7523.1	BUSHING, .625 X .510 X 1.50
20	1	9554.21	SPROCKET, 30T
21	1	9554.16	SPROCKET, 25T
22	1	9554.13	SPROCKET, 22T
23	1	9554.9	SPROCKET, 18T
24	1	9554.6	SPROCKET, 15T
25	1	9554.3	SPROCKET, 15T
26	1	9654	SPROCKET, DOUBLE INTERMEDIATE, 12-20T
27	2	N-2101	NUT, NYLOCK 3/8"-16 G8
28	2	HM-2860	HEX, BOLT, 8 X 60, G8.8
29	2	NM-1801	NUT, HEX, 8mm, G8.8
30	1	H-4301	BOLT, HEX, 1/2"-13 X 3" G5
31	3	N-4001	NUT, HEX, 1/2"-13, G8
32	1	CB-4411	BOLT, CARR., 1/2"-13 X 1.50, G5
33	1	10172090	ROLL PIN, 6 X 25mm
34	1	10172091	ROLL PIN, 6 X 30mm
35	2	10170065	SPLIT PIN, 5 X 30mm
36	1	W-5410	WASHER, FLAT, 5/8" SAE G8
37	1	H-3320	BOLT, HEX, 3/8"-16 X 3-1/2" G8
38	1	W-2210	WASHER, FLAT, 3/8" USS G8
39	2	W-2410	WASHER, FLAT, 3/8" SAE G8
40	1	NM-31205	NUT, NYLOCK, 12mm, G8.8
41	1	HM-61280	HEX, BOLT, 12 X 80, G8.8
42	1	H-3200	BOLT, HEX, 3/8"-16 X 2" G8
43	2	10624014	WASHER, FLAT, 31 X 41 X 1
44	2	10621046	WASHER, FLAT, 13 X 27 X 2
45	2	10622024	WASHER, FLAT, 16.5 X 26 X 1
46	1	10118	GREASE ZERK, 6mm

MICROSEM ASSEMBLY

Microsem metering assembly

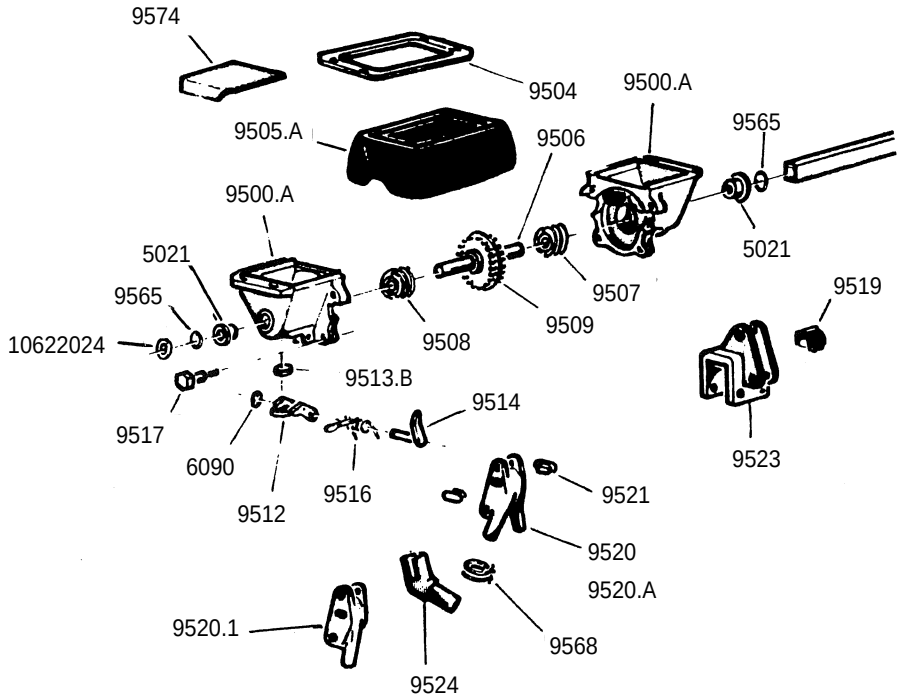

5021	Self lubricated bushing
6090	Snapring, 6mm
9500.a	Housing(half), metering unit (replaces old 9500 & 9501 left & right sides)
9504	Steel base (to hold down hopper to meter)
9505.a	Rubber skirt
9506	Main spindle(in meter unit, requires 4x35 roll pins)
9507	Worm gear, left(requires 6x25 roll pin)
9508	Worm gear, right(requires 6x25 roll pin)
9509	Central metering gear(requires 4x25 roll pin)
9512	Trap door (to clean out meter unit)
9513.a	Seal for trap door
9514	Lever for trap door
9516	Spring for trap door
9517	Bolt, to fasten two housings together
9519	Rubber plug
9520	Two outlet chute (towards the front)
9520.a	Two outlet chute (towards the rear)
9520.1	Single outlet
9521	Rubber plug for side of chute
9523	Clamp/mounting bracket
9524	Elbow for single outlet
9565	Rubber O-ring
9574	Plate for hopper (to convert to one outlet)
10622024	Washer, 16 x 26 x 1
10172041	Roll pin, 4 x 25
10172043	Roll pin, 4 x 35
10172090	Roll pin, 6 x 25

651404	Complete metering assembly, w/two outlets, mounting bracket & no hopper

MICROSEM ASSEMBLY
HOPPERS & LIDS

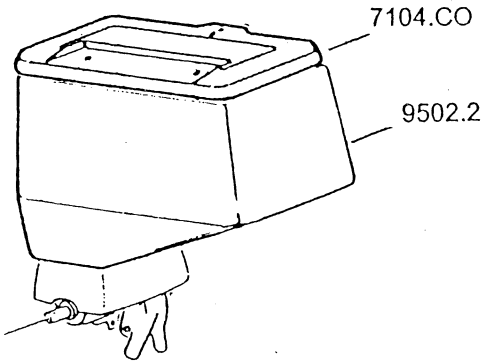

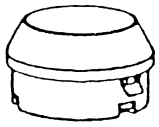

L101

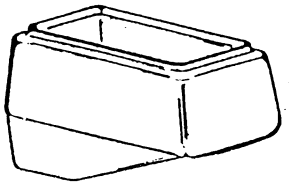

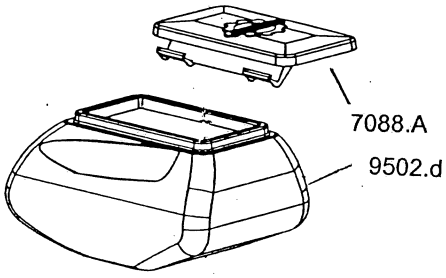

651404	Complete metering assembly, w/two outlets mounting bracket & no hopper
641434	1-standard size hopper w/lid, metering assy. w/2 rear outlets complete
641434.1	1-standard size hopper w/lid, metering assy. w/1 outlet complete
641472	2-standard size hoppers w/lid, metering assy. w/2 rear outlets complete
641491	2-large size hoppers w/lid, metering assy. w/2 rear outlets complete

7088.A	Hopper lid, black, w/spring clip, for hopper #9502.D
7104.CO	Lid w/spring clip, for large hopper
9502.1A	Plastic hopper only, 25 liter, offset outlet
9502.D	Plastic hopper only, 25 liter, starting 2004
9502.2	Plastic hopper only, large size, offset outlet
L101	Lock-n-Load valve only
L101M	Lock-n-Load valve mounted on lid #7088.N
L101MA	Lock-n-Load valve mounted on lid #7088.A

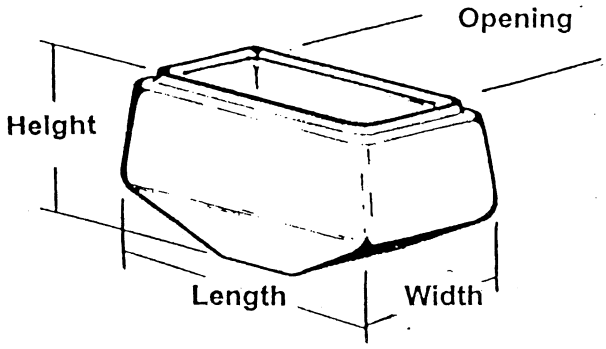

Dimensions of hoppers & lids

9502.1A	10" wide x 16-1/2" long 9" tall with a 5" x 15" opening
9502.2	12-1/2" wide x 17" long 12" tall with an 8" x 15" opening
9502.D	11" wide x 17-1/2" long 9" tall with a 5" x 10-1/2" opening
7088.N	7" wide x 16-3/4" long
7088.A	7" wide x 12-1/2" long
7104.CO	10" wide x 17" long

Insecticide drop tubes

7085.DA	Drop tube, right hand
7085.GA	Drop tube, left hand
9522	Hose (specify length)
9568	Hose clamp (for 9522)
9585.B	Male rear guide
9631	Spreader drop tube
9632.A	Mounting clamp
9633.A	Mounting clamp
9634	Spreader for drop tube
9645	Protective sleeve on sliding drop tube assy.
9661	Female half of sliding drop tube assembly
9662	Male half of sliding drop tube assembly
9631.ASY	Spreader tube assembly, contains:
	1 - 9585.B (rear guide)
	1 - 9631 (drop tube)
	1 - 9632.A (clamp)
	1 - 9633.A (clamp)
	1 - 9634 (spreader)
900236	Bungi cord (to keep sliding tubes together)

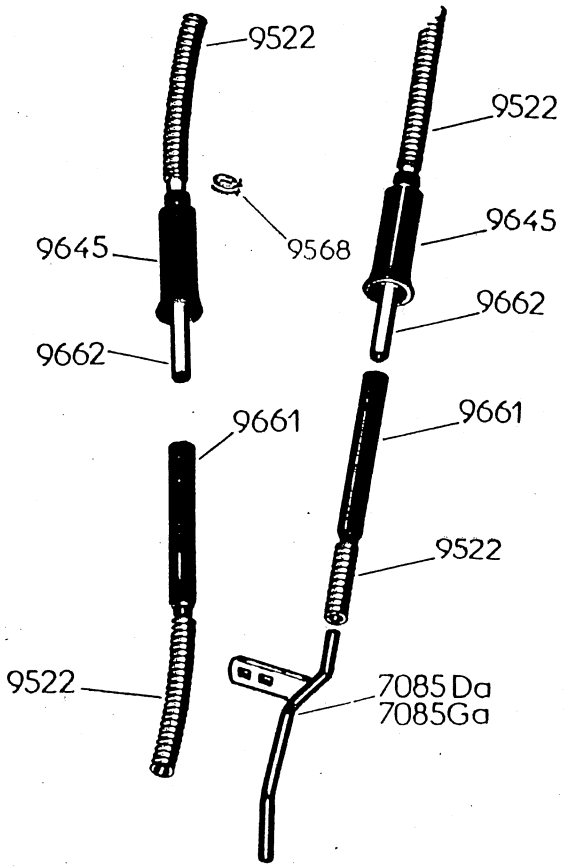

Drop tube between disc opener

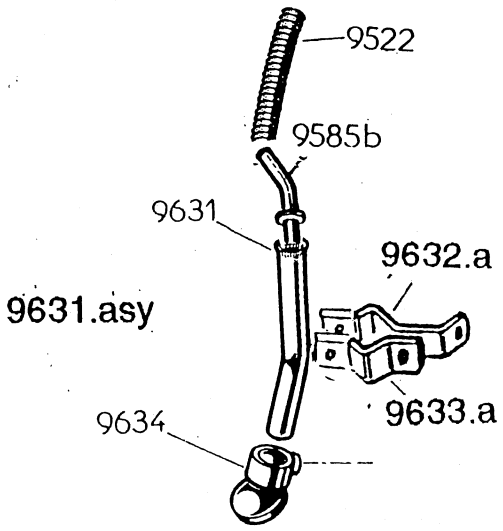

Spreader tube behind disc opener

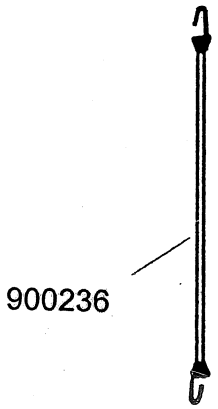

US INSECTICIDE

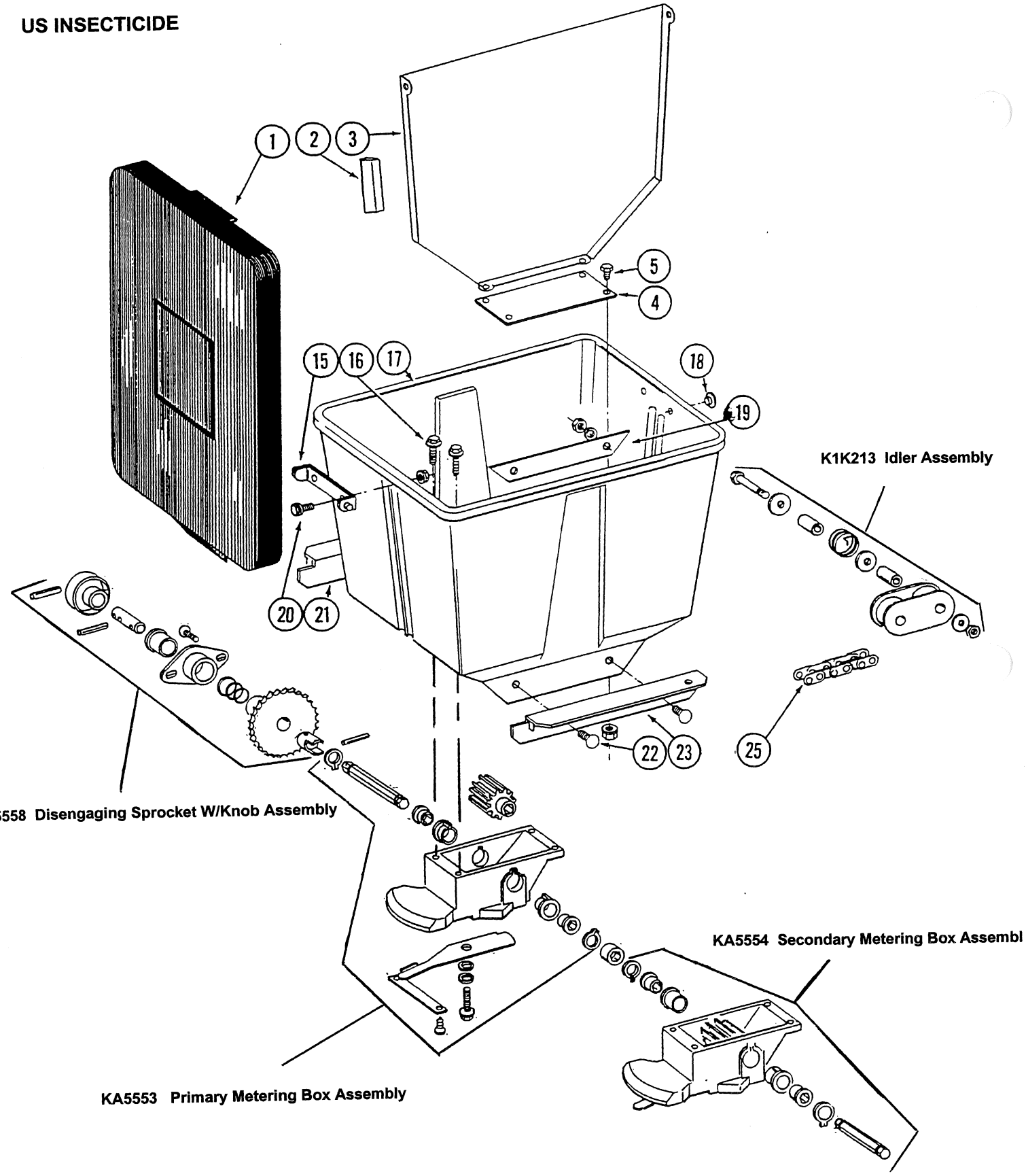

US Insecticide

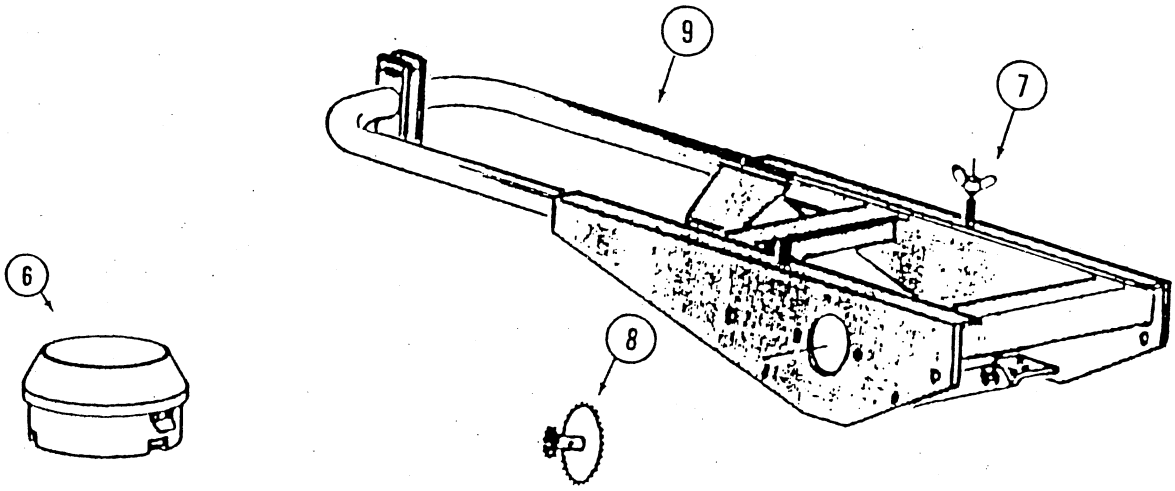

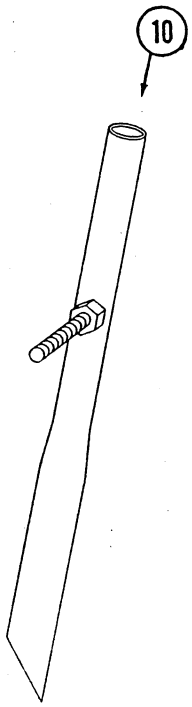

Item	Part No.	Description
1	KD7126	Lid
2	K3314-40	Foam strip, 40"
3	KA2076	Divider (used when two meters are used)
4	KD1056	Cover plate (used when only one meter is used)
5	K10022	Bolt, 1/4" x 1/2"
	K10621	Flange nut, 1/4"
6	L101	Lock-n-Load valve only
	L101K	Lock-n-Load valve mounted on lid #KD7126
7	6795	Wing nut, 8mm
8	7117	Double sprocket, 26-12 (replaces 7115 on meter box to drive insect. meter assy.)
	7117.S	Double sprocket, 27-12 tooth for #41 chain, for HD parallel linkage (replaces #7110.S)
9	200180	Frame to mount insecticide box on
10	201362	Drop tube(11/16" ID), for NG+ (6x30 mounting bolt)
15	KD1060	Hinge
16	K10570	Self tapping screw, 1/4" x 3/4"
17	KD1058	Hopper only
18	KD1089	Plug
19	KD1072	Reinforcing strap
20	K10023	Bolt, 1/4" x 3/4"
21	KD1059L	Support, left hand
22	K10311	Carriage bolt, 3/8" x 3/4" short neck
	W-2610	Lock washer, 3/8"
	N-2001	Nut, 3/8"
23	KD1059R	Support, right hand
25	K3303-114	Chain, #41(120 links w/conn. link)

US INSECTICIDE

KA5553 PRIMARY METERING BOX ASSEMBLY

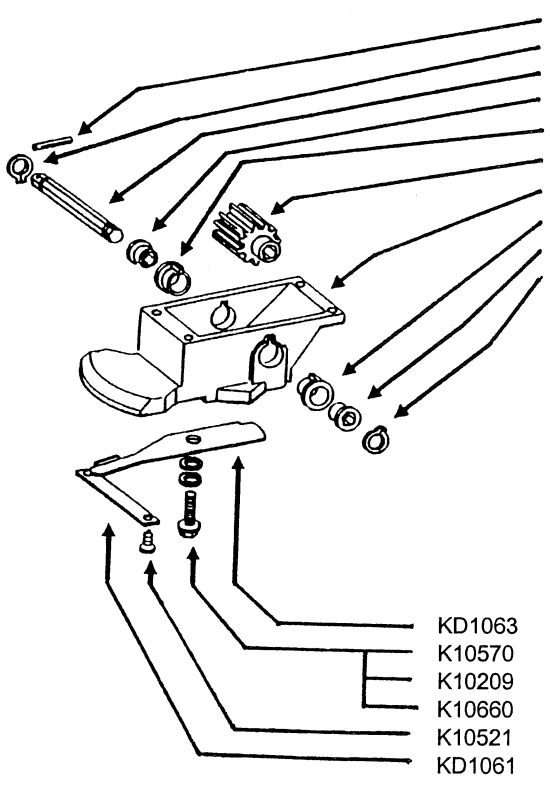

K10546	Spring Pin, 3/16 x 1 1/4
K10567	Retaining Ring
KD7588	Shaft
KD7258	Hex Bushing
KB0115	Bearing
KD7148	Feed Roller, Hex Bore
KB0116	Granular Housing
KB0115	Bearing
KD7258	Hex Bushing
K10567	Retaining Ring
KD1063	Metering Gate
K10570	Self-tapping Screw, 1/4 x 3/4
K10209	Washer, 1/4 USS
K10660	Wave Washer
K10521	Self-tapping Screw, 10 x 3/8
KD1061	Support Strap

KA5554 SECONDARY METERING BOX ASSEMBLY

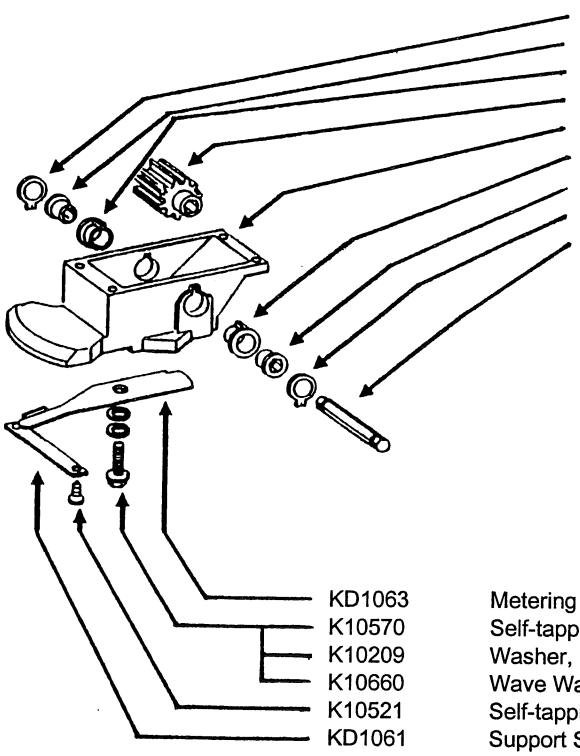

K10567	Retaining ring
KD7258	Hex Bushing
KB0115	Bearing
KD7148	Feed Roller, Hex Bore
KB0116	Granular Housing
KB0115	Bearing
KD7258	Hex Bushing
K10567	Retaining ring
KD7591	Shaft
KD1063	Metering Gate
K10570	Self-tapping Screw, 1/4 x 3/4
K10209	Washer, 1/4 USS
K10660	Wave Washer
K10521	Self-tapping Screw, 10 x 3/8
KD1061	Support Strap

US INSECTICIDE

KA5558 DISENGAGING SPROCKET W/KNOB ASSEMBLY

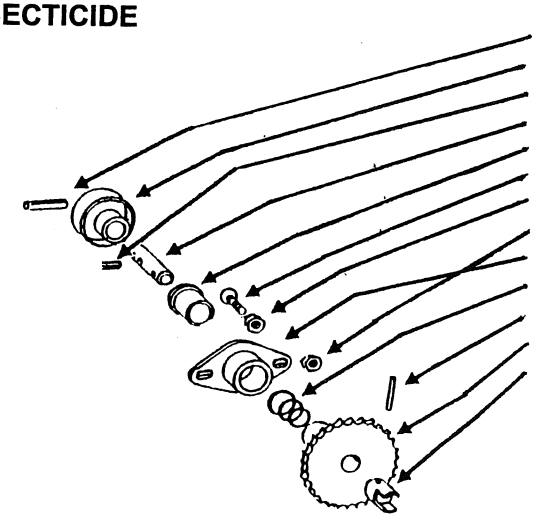

K10569	1	Spring Pin, 1/8 x 1 1/2
KD7587	1	Knob
F64251	1	Spring Pin, 1/4 x 1 1/2
KD7589	1	Throwout Pin
KB0121	1	Bearing
H-2100	2	Hex Head Bolt, 5/16 x 1
N-1001	2	Nut, 5/16
N-1300	2	Lock Nut, 5/16
KB0183	1	Bearing Mount
KD1075	1	Spring
K10568	1	Spring Pin, 3/16 x 7/8
KA5533	1	Sprocket, 24 tooth
KB0184	1	Coupling

K1K213 IDLER ASSEMBLY, COMPLETE

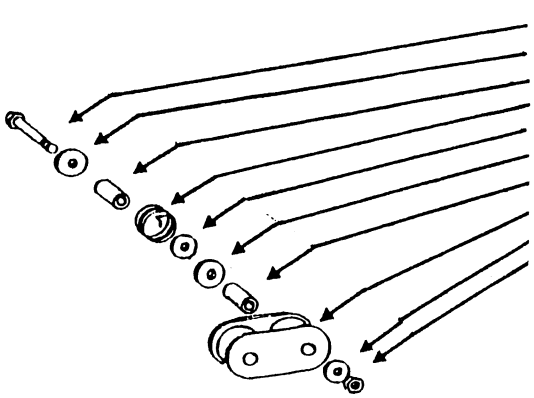

H-3309	1	Hex Head Bolt, 3/8-16 x 3"
K10210	1	Washer, 3/8 USS
KD2971-10	1	Bushing, 9/16
KD9306	1	Spring
K10210	3	Washer, 3/8 USS
K10201	1	Special Washer
KD1026	1	Spacer, 1 3/16"
KD9240	1	Idler
K10210	1	Washer, 3/8 USS
K10108	1	Lock Nut, 3/8-16

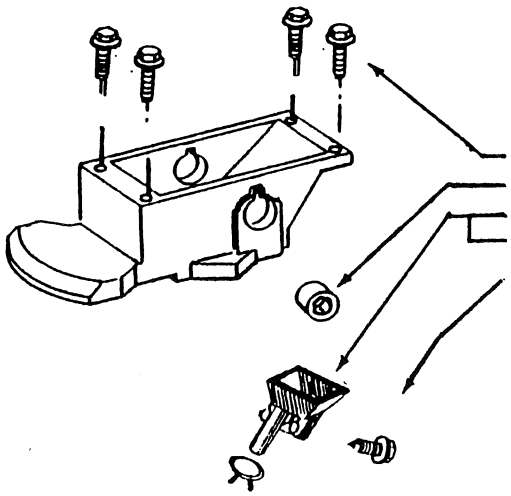

KA5559 HARDWARE BAG

K10570	4	Self-tapping Screw, 1/4 x 3/4
KD7592	1	Coupler, Hex Bore
KD2423	1	Funnel, Plastic
K10680	1	Hose Clamp
K10523	2	Self-tapping Screw, 10-24 x 1/2

US INSECTICIDE

Rear Banding Attachment

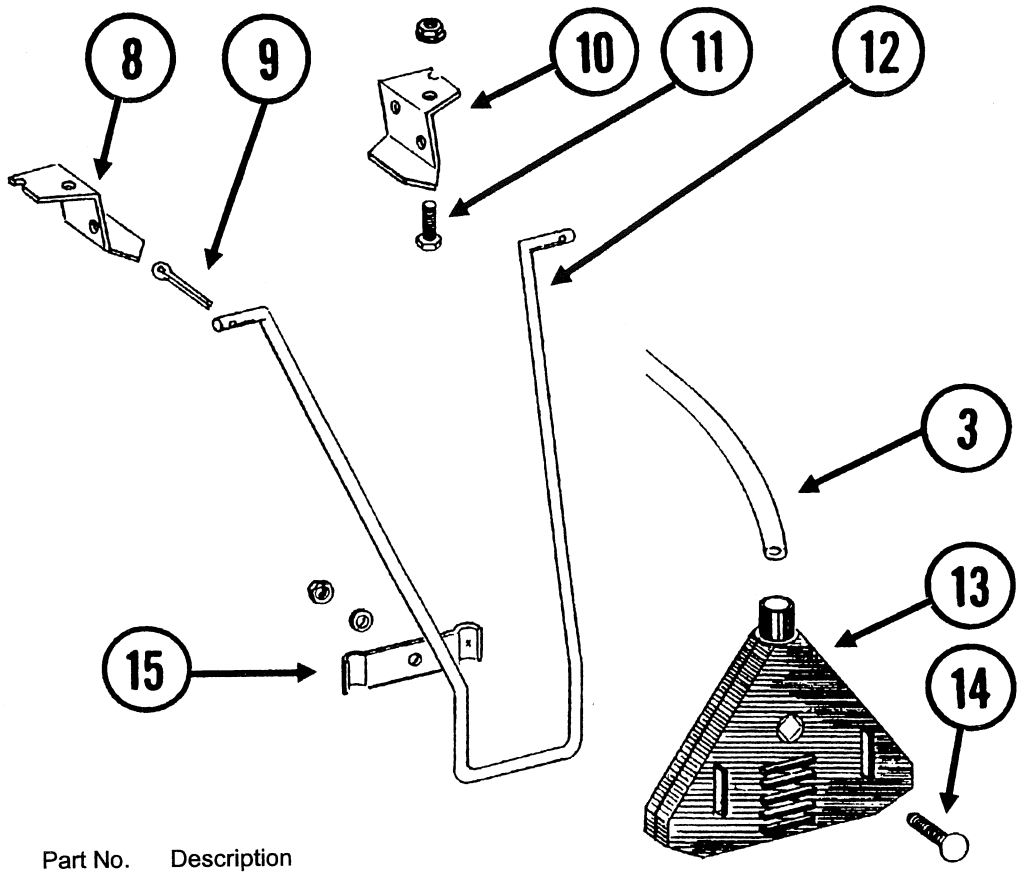

Item	Part No.	Description
3	KD2947	Hose, precut, 7/16" x 28"
8	KD1115L	Hanger bracket, left hand
9	K10452	Cotter pin, 1/8" x 1/2"
10	KD1115R	Hanger bracket, right hand
11	K10310	Carriage bolt, 1/4" x 3/4"
	K10227	Lock washer, 1/4"
	K10103	Nut, 1/4"
12	KD8756	Hanger, standard length
13	KA2075	Diffuser, 14" band
14	K10306	Carriage bolt, 3/8" x 2"
	K10229	Lock washer, 3/8"
	K10101	Nut, 3/8"
15	KD1118	Clamp plate

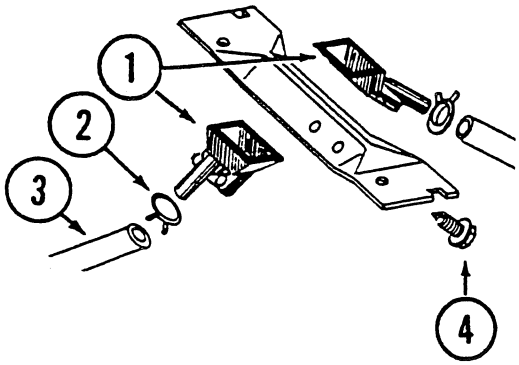

The above items make up the kit: **#K7301X**

1	KD2423	Funnel, plastic
	KD2423.JD	Funnel, aluminum
2	K10680	Hose clamp
4	K10523	Self-tapping screw, 10-24 x 1/2"
	KGRM2804	Hose, in bulk by the foot
12	900108	Hanger, extra long, for use with disc hiller system

CHECKING GRANULAR CHEMICAL APPLICATION RATE
US INSECTICIDE SYSTEM

Many things can affect the rate of delivery of granular chemicals such as temperature, humidity, speed, ground conditions, flow ability of different materials or any obstruction in the meter.

A field check is important to determine the correct application rates. The following method for calibrating is recommended:

1-Attach a plastic bag to each chemical meter outlet tube.

2-Lower the planter and drive 500 feet at the desired seeding population and speed.

3-Weigh (in ounces) the amount of chemical in one bag.

4-Multply the number of ounces by the factor shown below for your row width.

Row Width	Factor
38"	1.7
36"	1.8
30"	2.2
22"	3

Example: You have driven 500 feet. Your row spacing is 30" and you have collected 4.5 ounces of material in a plastic bag. Multiply 4.5 by the factor 2.2. This would indicate that you are applying 9.9 lbs./acre.

If you do not have the desired amount of chemical per acre, adjust the metering gate accordingly. Zero for minimum output to 45 for maximum output.

NOTE: It is important to check calibration of all rows.

NOTE: Since the chemical meter is driven directly from the seed meter box, changing the seed population after calibrating will change the output of the chemical meter, even if ground speed remains constant.

It is suggested that after a desired rate is achieved through calibration, you record the ground speed and transmission setting used for the calibration along with the chemical used for future reference.

WARNING! Agricultural chemicals can be dangerous. Improper use can result in injury to persons, animals and soil. Handle with care and follow directions supplied by the chemical manufacturer.

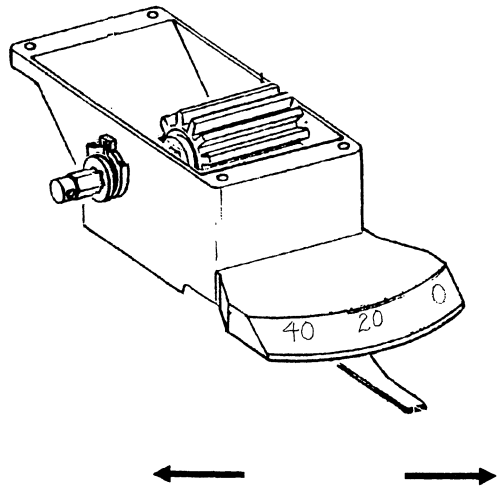

More output Less output

US Insecticide, single outlet, plastic hopper

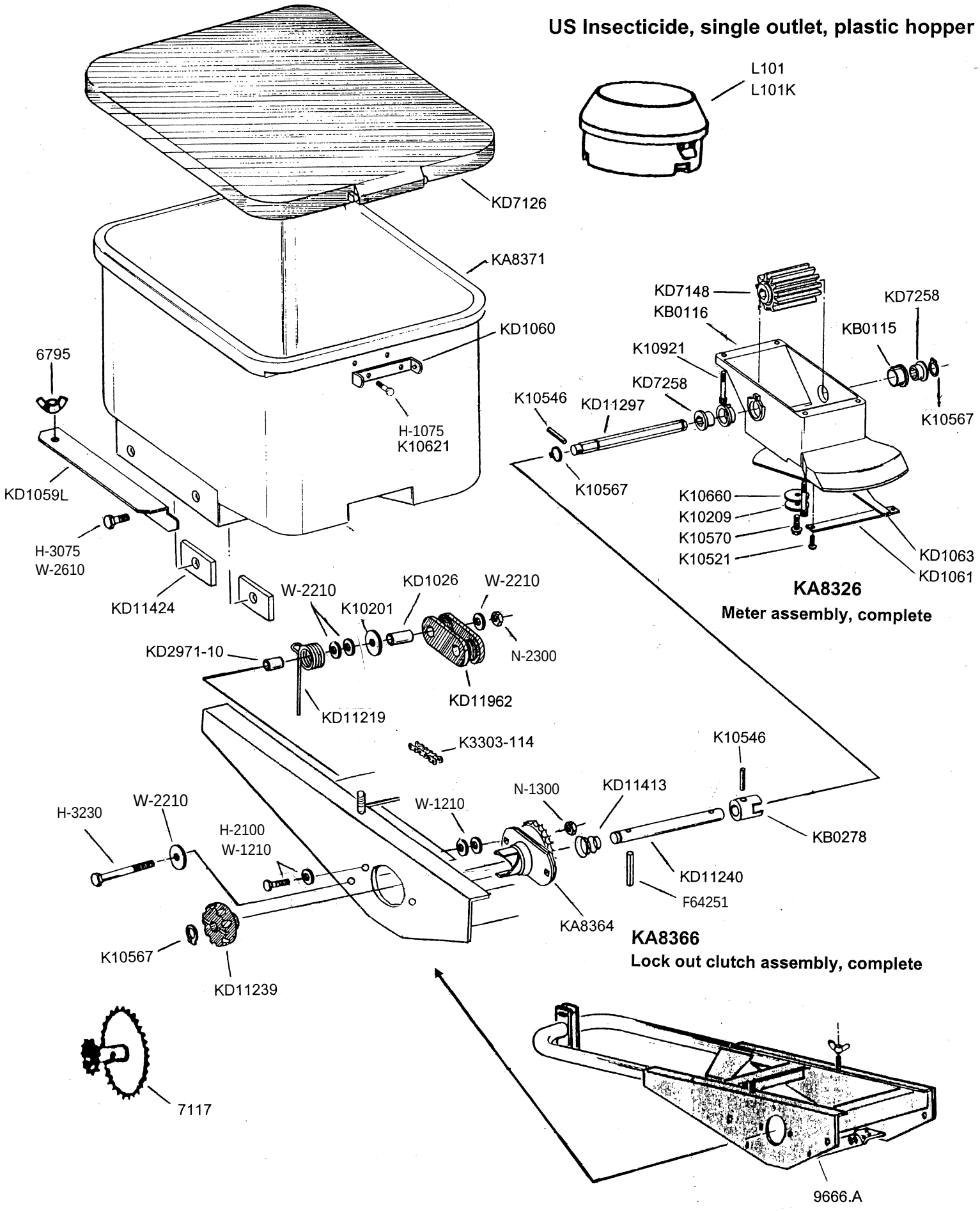

US Insecticide, single outlet, plastic hopper

6795	Wing nut, 8mm
7117	Double sprocket, 26-12 (replaces 7115 on meter box to drive insecticide meter assembly
9666.A	Frame to mount insecticide box on
KD7126	Lid
L101	Lock-n-load valve only
L101K	Lock-n-load valve mounted on lid #KD7126
KA8371	Hopper
KD1060	Hinge
H-1075	Bolt, 1/4-20 x 3/4"
K10621	Flange nut, 1/4-20
KD1059L	Support, left hand(shown)
KD1059R	Support, right hand
H-3075	Bolt, 3/8-16 x 3/4"
W-2610	Lock washer, 3/8
KD11424	Block with threaded hole, 3/8-16
K10567	Retaining ring, 5/8"
K10546	Roll pin, 3/16" x 1-1/4"
KD11297	Shaft
KD7258	Hex bushing
KB0115	Bearing
K10921	Hex socket head bolt, 10-24 x 7/8"
KD7148	Feed roller, hex bore
KB0116	Granular housing
KD1063	Metering gate
KD1061	Support strap
K10660	Wave washer, 1/2"
K10209	Washer, 1/4" USS
K10570	Self tapping screw, 1/4" x 3/4"
K10521	Self tapping screw, No.10 x 3/8"
KB0278	Coupler
KD11240	Shaft
F64251	Roll pin, 1/4" x 1-1/2"
KD11413	Spring
K3303-114	Drive chain, #41, 120 links with conn. link
KD11239	Knob
H-2100	Bolt, 5/16-18 x 1"
W-1210	Flat washer, 5/16" USS
N-1300	Lock nut, 5/16-18
H-3230	Bolt, 3/8-16 x 2-3/4"
W-2210	Flat washer, 3/8" USS
KD2971-10	Spacer, 9/16" long
KD11219	Spring
KD1026	Spacer, 1-3/16" long
KD11962	Idler (replaces KD9240)
K10201	Special washer, 3/8" x 1-1/2" OD
N-2300	Lock nut, 3/8-16
KA8366	**Lock out clutch assembly, complete**
KA8326	**Meter assembly, complete**

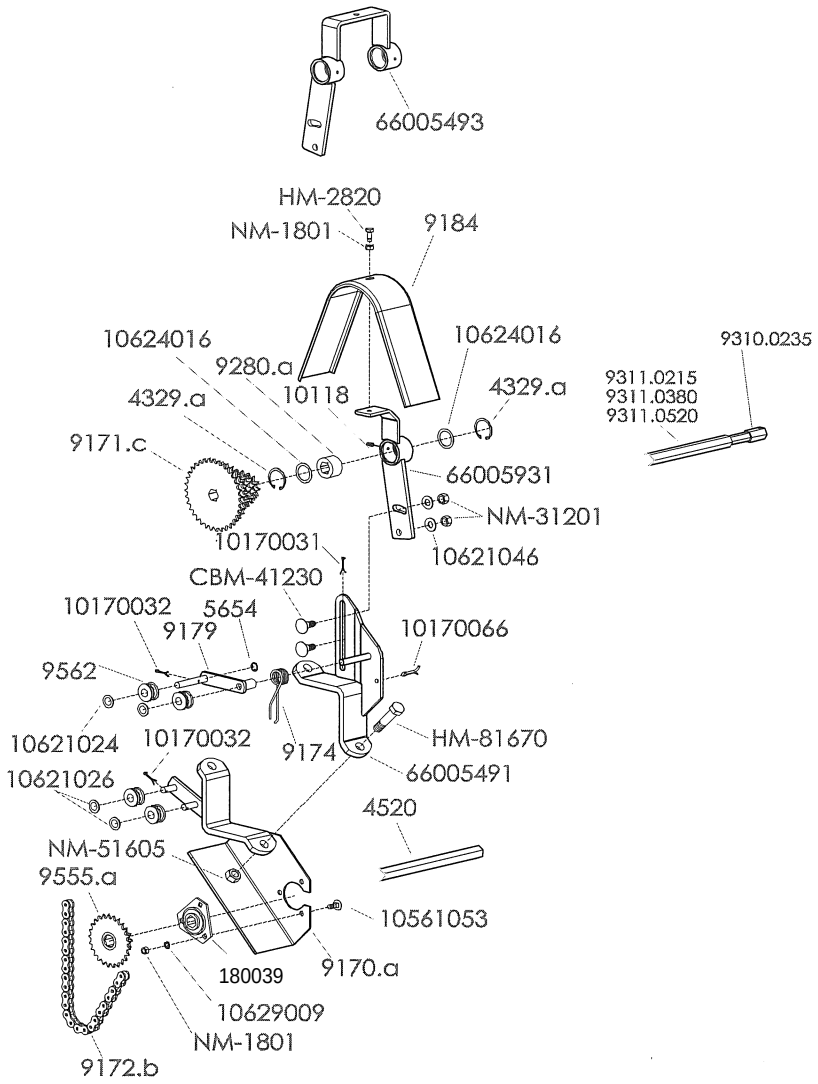

PART No.	DESCRIPTION
4329.A	Snapring, internal
180039	Flange Bearing Kit
300597	Bearing only (205KRRB2 ref. #) 7/8" hex bore
300596	Flangette, 3 bolt hole
5654	Stop snapring, 12mm
66005491	Support bracket
66005493	Double sided support bracket
66005931	Support bracket for drive shaft
9170.A	Clamp bracket w/bearing support
9171.C	Upper sprocket cluster w/hexagon center hole (12, 16, 19, 22, 30 & 35 tooth sprockets)
9172.B	Chain, 5R (108 links w/connecting link)
9174	Spring
9179	Chain tightener bracket
9184	Shield
9280.A	Nylon shaft support bushing, w/hex hole
9310.0235	Hex sliding tube, male, 235mm(9-1/4")
9311.0215	Hex sliding tube, female, 215mm(8-1/2")
9311.0380	Hex sliding tube, female, 380mm(15")

PART No.	DESCRIPTION
9311.0520	Hex sliding tube, female, 500mm(20-1/2")
9555.A	Lower double sprocket (12T & 25T)
9555.2	Lower sprocket cluster (12,13,21,23 & 25T)
9562	Plastic chain roller
10170031	Cotter pin, 3.5x25
10170032	Cotter pin, 3.5x30
10170066	Cotter pin, 5x35
10561053	Carriage head bolt, 8x18
10621024	Washer, 13x18x1
10621026	Washer, 13x18x2
10621046	Washer, 13x27x2
10624016	Washer, 31x41x2
10629009	Lock washer, external tooth, 8mm
HM-2820	Bolt, 8x20
HM-81670	Bolt, 16x70
NM-1801	8mm nut
NM-31201	12mm nut
NM-51605	16mm nylon locknut
CBM-41230	Carriage head bolt, 12x30

Fertilizer Hopper and Meter 5x5

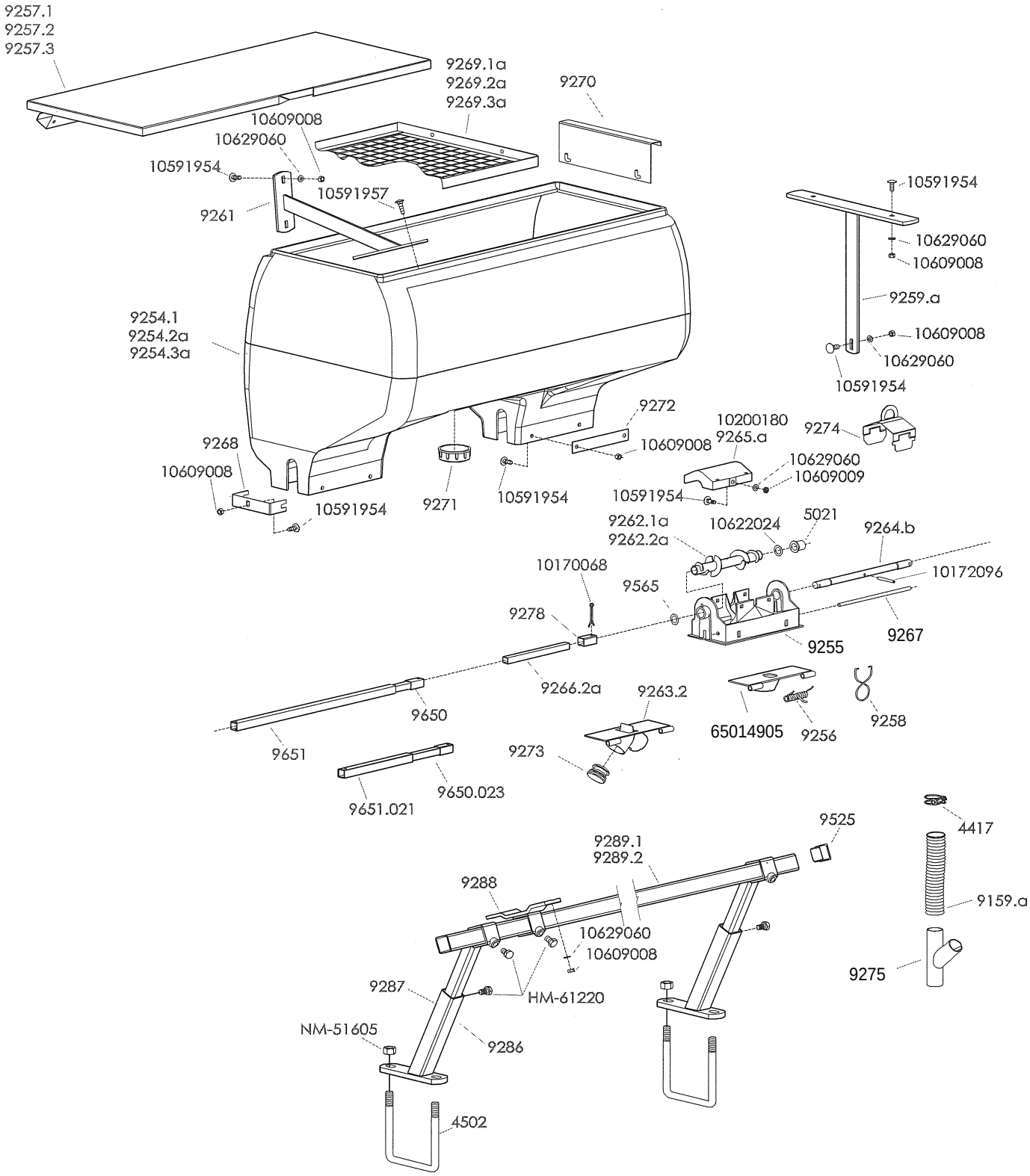

Fertilizer Hopper and Meter 5x5

PART No.	DESCRIPTION
4502	U bolt, 16mm
NM-51605	16mm Nylon Lock nut
4417	Hose clamp
5021	Bushing (self lubricated)
9159.A	Fertilizer hose, 2 feet long
9254.1	Plastic fert. hopper, 1 outlet(225lb. capacity)
9254.2A	Plastic fert. hopper, 2 outlet(400lb. capacity)
9254.3A	Plastic fert. hopper, 3 outlet(625lb. capacity)
9256	Spring, for clean out door
9257.1	Metal lid for 1 outlet hopper
9257.2	Metal lid for 2 outlet hopper
9257.3	Metal lid for 3 outlet hopper
9258	Hose clamp
9259.A	Support inside hopper, 3 outlet hopper only
9261	Support inside hopper
9262.1A	Standard auger (blue)
9262.2A	High output auger (orange) with small ends
65014905	Clean out door, 1 outlet
9263.2	Clean out door, 2 outlet
9264.B	Spindle, meter assembly
9265	Auger cover, old style(9" wide)
10200180	Auger cover, tab holes in all 4 corners
9266.2A	Square tube, male, 10" long
9267	Hinge pin for clean out door
9268	Hopper end reinforcement strap SS
9269.1A	Sieve for 1 outlet hopper
9269.2A	Sieve for 2 outlet hopper
9269.3A	Sieve for 3 outlet hopper
9270	Sieve hanger bracket
9271	Plastic cap
9272	Hopper side reinforcement strap SS
9273	Plastic plug for outlet on clean out door
9274	Cover shield clip
9278	Square tube coupler, 1-5/8" long
9286	Bottom mounting bracket
9287	Top mounting bracket
9288	Hopper support bracket
9289.1	Support bar (19-3/4")
9289.2	Support bar (33-1/2")
9525	Plastic end cap
9565	O-Ring
9255	Aluminum meter housing
10170068	Cotter pin, 5 x 45mm
10172097	Roll pin, 6 x 60
10629060	Washer, 8.5x16, SS
10622024	Washer, 16.5x26x1
10591954	Carriage bolt, 8x22mm, SS
10591957	Bolt, 8x30, SS
10609008	8mm nut, SS
10609009	8mm thin nut, SS
HM-61220	Bolt, 12x20

PART No.	DESCRIPTION
651408	**Meter assembly complete, with High output auger**
	Hex sliding tubes
642511	Hex shaped sliding tube set (male & female) 9-1/4" & 31-1/2" long
9310.0235	Hex sliding tube, male, 235mm(9-1/4")
9311.0215	Hex sliding tube, female, 215mm(8-1/2")
9311.0380	Hex sliding tube, female, 380mm(15")
9311.0520	Hex sliding tube, female, 520mm(20-1/2")
	Square sliding tubes
642502	Sq sliding tube set (male & female) both 33-1/2" long
9650.023	Sq sliding tube, Male, 230mm(9")
9650.035	Sq sliding tube, Male, 350mm(13-3/4")
9650.085	Sq sliding tube, Male, 850mm(33-1/2")
9651.035	Sq sliding tube, Female, 350mm(13-3/4")
9651.085	Sq sliding tube, Female, 850mm(33-1/2")
9651.120	Sq sliding tube, Female, 1.2M(47-1/4")

Double Disc and Knife Fertilizer Assembly 5x5

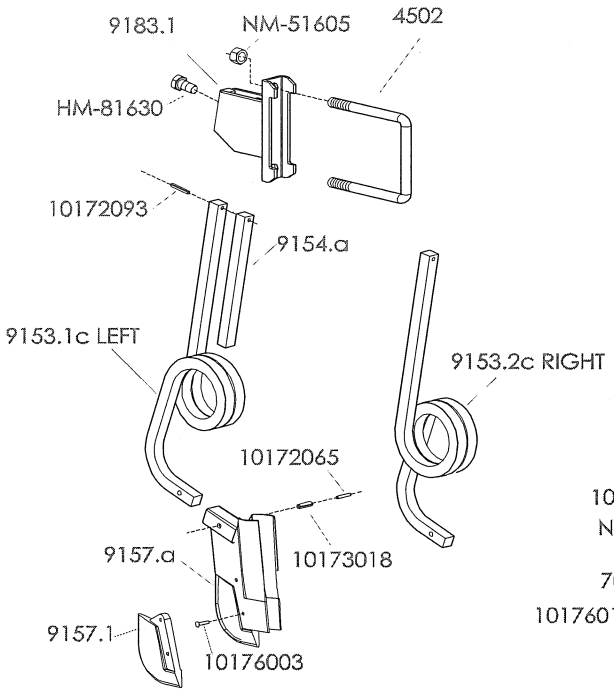

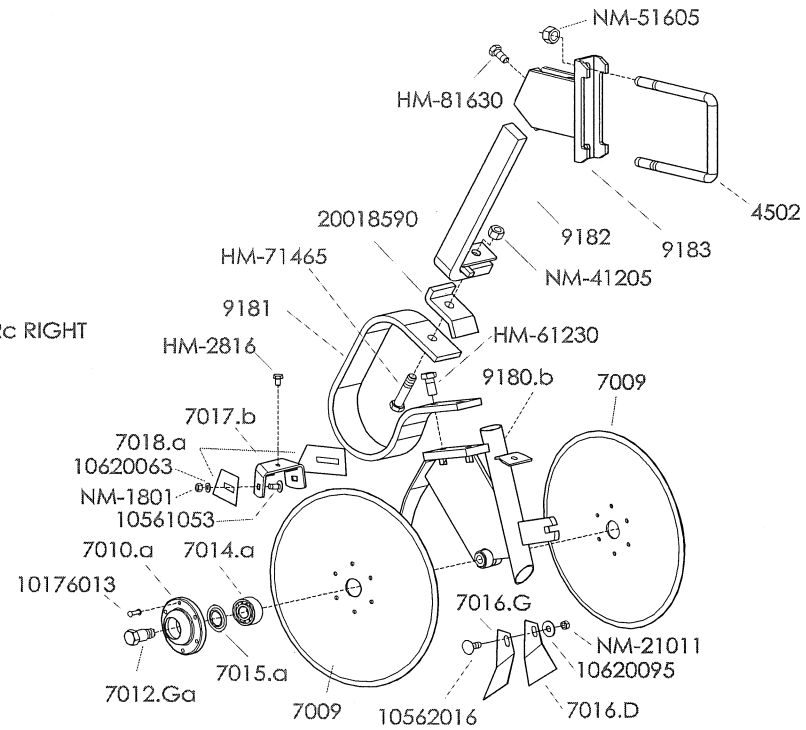

PART No.	DESCRIPTION
4502	U bolt, 16mm
NM-51605	16mm nylon locknut
7009	Disc only
7009.1A	**Disc complete w/hub & bearing**
7010.A	Hub only
10176013	Rivet, button head, 6 x 20
7012.GA	Lefthand spindle(shown)
7012.DA	Righthand spindle
7014.A	Bearing
7015.A	Sealing washer
7016.D	Right scraper, inside
7016.G	Left scraper, inside
7017.B	Bracket, for outside scrapers
7018.A	Outside scraper
9153.1C	Tine offset to the left
9153.2C	Tine offset to the right
9154.A	Reinforcement bar
10172093	Roll pin, 6 x 40mm
9157.A	Fert. Knife w/point(mounts with two roll pins)
10172065	Roll pin, 5 x 30mm
10173018	Roll pin, 8 x 30mm
9157.1	Replaceable cast point(takes 2 - 5x34 rivets)
10176003	Rivet, 5 x 34 (countersunk head)
9180.B	Main housing for assembly
9181	Spring support for discs
9182	Mounting bar

PART No.	DESCRIPTION
9183	Clamp for disc assembly
9183.1	Clamp for knife assembly
NM-1801	8mm nut
NM-21011	10mm nut
NM-41205	14mm nut
10561053	Carriage bolt, 8x18
10562016	Carriage bolt, 10x25
HM-2816	Bolt, 8x16
HM-61230	Bolt, 12x30
HM-71465	Bolt, 14x65
HM-81630	Bolt, 16x30
10620063	Washer, 8.5x16x1.5
10620095	Washer, 10.5x27x2
650918	**Left hand Knife assembly, complete**
650919	**Right hand Knife assembly, complete**
611080	**Complete double disc assembly with mounting bracket**
650926	**Double disc assembly less the mounting bracket**

US Fertilizer Transmission, On Pull Type Models

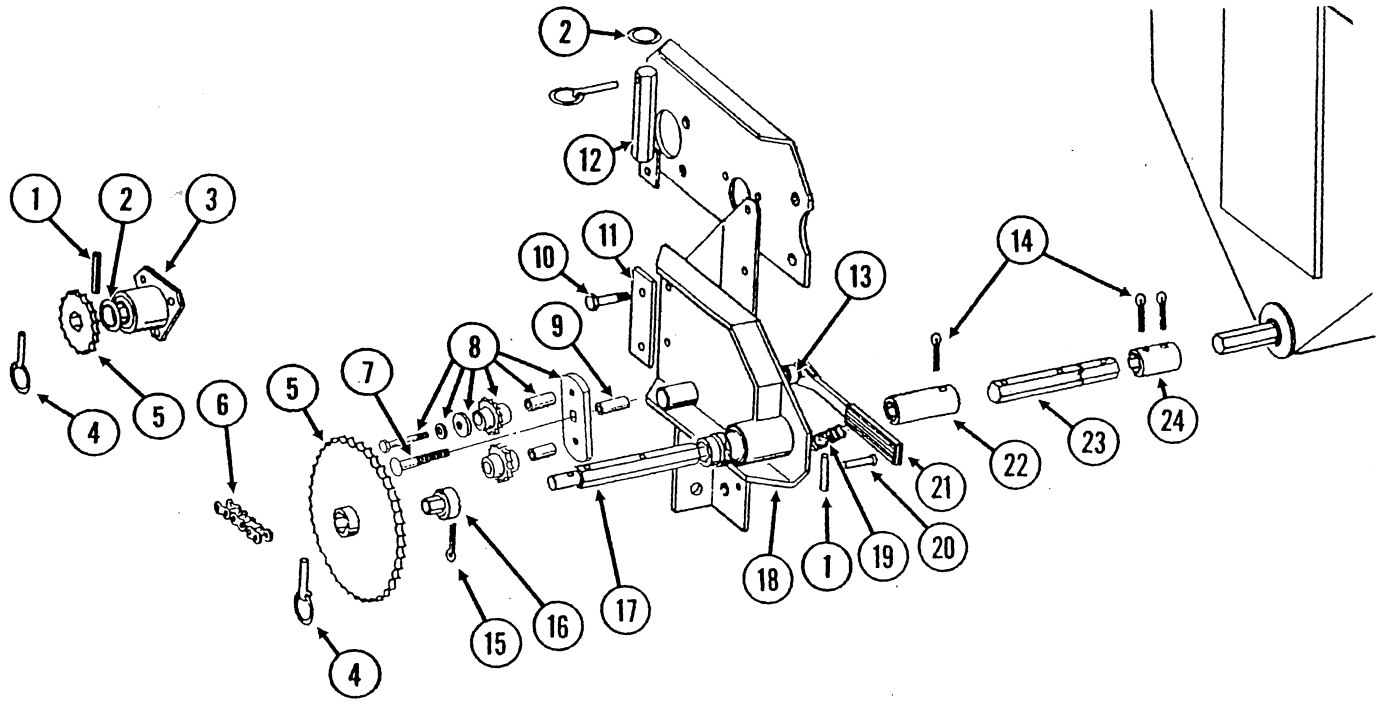

Item	Part No.	Description
1	F64251	Roll pin, 1/4" x 1-1/2"
2	K10233	Machine bushing, 1"ID x 1-1/2"OD, 1/8" thick
3	KA5223	Spacer w/bearing
	KA5116	Bearing, 7/8" hex bore, cylindrical
4	6077	Lynch pin, 1/4"
5	KA5105	Sprocket, 15 tooth, #40
	KA5107	Sprocket, 19 tooth, #40
	KA5114	Sprocket, 30 tooth, #40
	KA5115	Sprocket, 33 tooth, #40
	KA6337	Sprocket, 35 tooth, #40
6	K3310-98	Chain, #40, 98 links(w/conn. link)
7	K10419	Carriage bolt, 1/2" x 4-1/2"
	K10111	Lock nut, 1/2"
8	KA7336	Idler w/bolt on sprockets
	KD7426	Plastic sprocket
	KD1026	Spacer, 1-3/16"
	W-2410	Washer, 3/8"
	W-2610	Lock washer, 3/8"
	H-3130	Bolt, 3/8" x 1-3/4"
9	KD31380-17	Sleeve, 2-5/16" wide
10	H-4220	Bolt, 1/2" x 2-1/2"
	H-4320	Bolt, 1/2" x 3-1/2"
	H-4201	Bolt, 1/2" x 2"
	W-4610	Lock washer, 1/2"
	N-4001	Nut, 1/2"

Item	Part No.	Description
11	KD8246	Overlay
12	KA5229	Sprocket storage rod
13	KD10161	Spacer, 3/8"
14	K10460	Cotter pin, 1/4" x 2"
15	F65127	Cotter pin, 3/16" x 2"
16	KD7127	Shear coupler
17	KD7870	Shaft, 7"
18	KA5678	Plate w/bearings and grease fitting
	KA5116	Bearing, 7/8" hex bore, cylindrical
	KA5624	Bearing, 7/8" hex bore, extended sleeve w/cross drilled hole
	K10640	Grease fitting, 1/4"-28
19	KD5857	Spring
20	K10408	Clevis pin, 5/16" x 3/4"
	K10409	Retaining ring, 5/16"
21	KA4235	Ratchet wrench w/protective covering
	K10445	Protective covering(on handle)
22	KD7867	Coupler, 3"
23	KD7871	Hex shaft, 6"
24	KD5886	Coupler, 1-3/4"

US FERTILIZER HOPPER

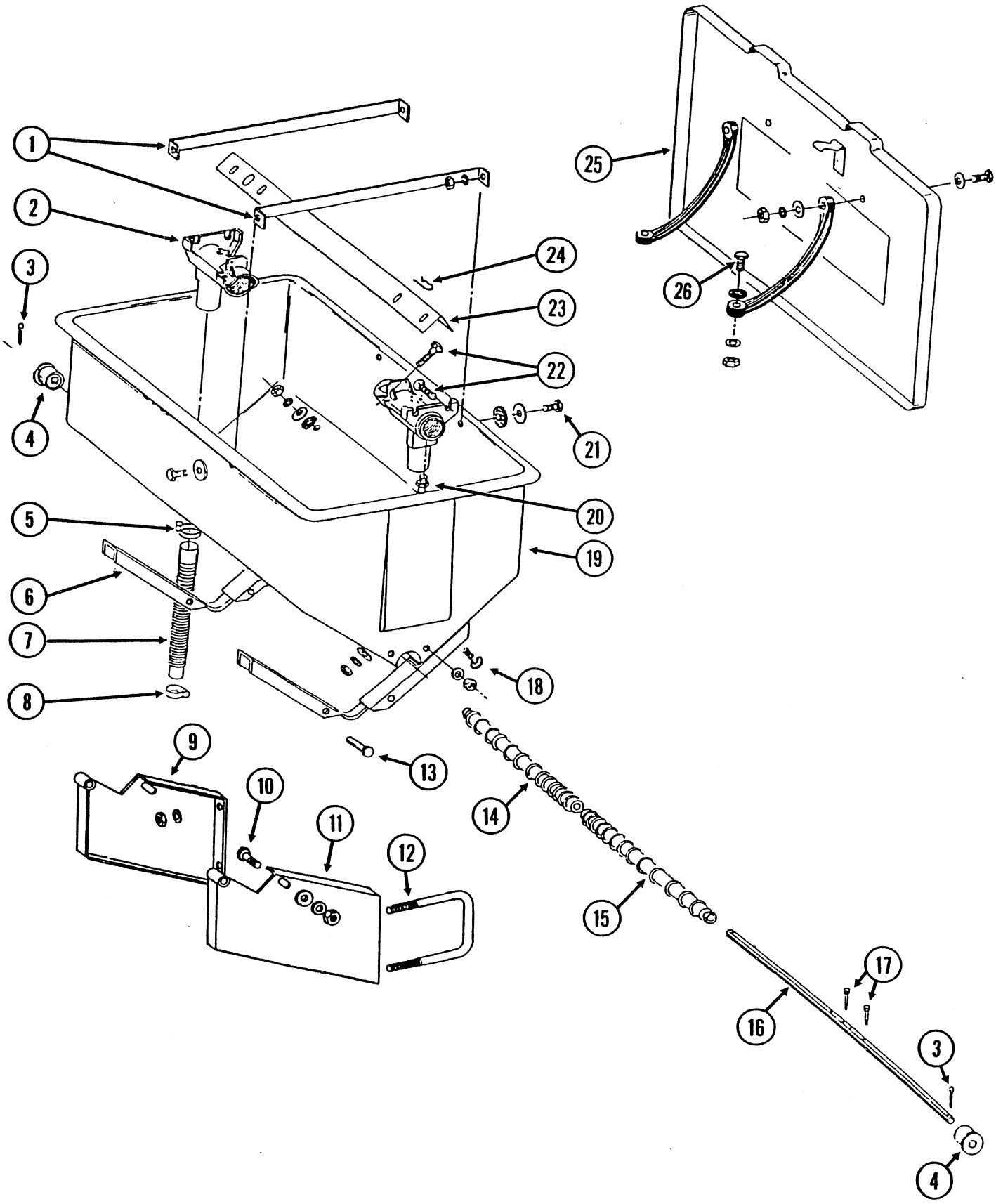

US Fertilizer Hopper

Item	Part No.	Description
1	KD1209	Strap (across top of hopper)
2	KD1200	Outlet housing (cast iron)
3	K10460	Cotter pin, 1/4" x 2"
4	KB0200	Auger bearing
5	K10676	Clamp, No. 36
6	KA5652	Saddle (to support hopper)
7	KD21398	Rubber hose, standard(9" to 16")
	KD1925	Rubber hose, extra long(14" to 24")
8	K10672	Clamp, No. 28
9	KA2534	Hopper mounting bracket, RH
10	H-4111	Bolt, 1/2" x 1-1/4"
11	KA2533	Hopper mounting bracket, LH
12	4502.S	U-bolt, 7" x 7" x 5/8"
13	K10561	Pin, 1/2" x 3"
	K10451	Cotter pin, 1/8" x 1"
14	KB0198	Auger, RH (as standing behind planter)
15	KB0199	Auger, LH (as standing behind planter)
16	KD7848	Shaft for auger
17	K10587	Bolt, 1/4" x 2", stainless steel
	K10588	Nut, 1/4"-20, stainless steel
18	CB-1114	Carriage bolt, 5/16" x 1-1/4"
	K10201	Special washer
	KD1213	Rubber washer
	W-1610	Lock washer, 5/16"
	N-1001	Nut, 5/16"-18
19	KD1379	Hopper (bare shell)
20	K10641	Grease fitting, 1/8" NPT
21	K10171	Bolt, 5/16" x 1-1/4"
	K10201	Special washer
	KD1213	Rubber washer
	W-1610	Lock washer, 5/16"
	N-1001	Nut, 5/16"-18
22	CB-1110	Carriage bolt, 5/16" x 1", grade 2
23	KD1207	Baffle (galvanized steel)
24	K10670	Hair pin clip, No. 3
25	**KA0898**	**Lid assembly complete(clips, rubber straps, and hardware)**
	KD1380	Front clip
	KD1210	Rubber strap
26	H-2120	Bolt, 5/16" x 1-1/2"
	W-1210	Flat washer, 5/16"
	W-1610	Lock washer, 5/16"
	N-1001	Nut, 5/16"-18
	KA5666	**Hopper assembly(items 2,6,18,19,22, & 24)**
	KA5667	**Auger, baffle & straps(items 1,3,4,14,15,16,17, & 23)**
	K6796X	**Mounting bracket kit complete(items 9,10,11,12, & 13)**

DOUBLE DISC FERTILIZER OPENER ASSEMBLY, US FERTILIZER SYSTEM

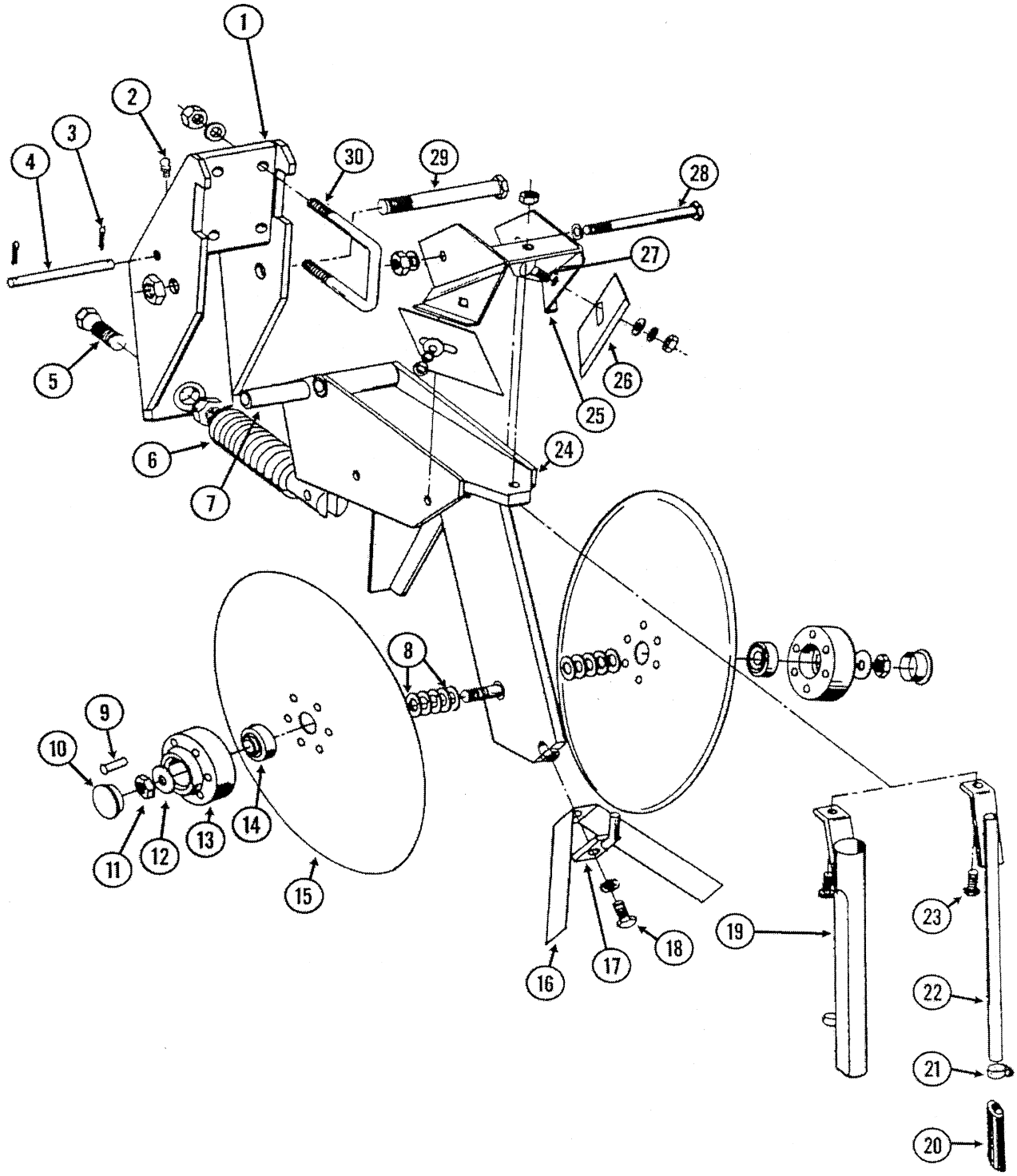

Double Disc Fertilizer Opener Assembly, US Fertilizer System

Item	Part No.	Description
1	KA8483	Bracket for mounting to 2-1/2 x 2-1/2 toolbar
2	K10938	Grease fitting, 1/4-28
3	K10451	Cotter pin, 1/8" X 1"
4	KD1657	Lock up pin
5	KD0962	Adjusting bolt, 5/8-18 X 3 1/4"
	K10499	Jam nut, 5/8-18
6	KA0328	Spring
7	KD0487	Bushing, 41/64" X 3 1/2"
8	K10213	Shim washer, 5/8" x .03" thick
9	K10542	Rivet, 1/4" X 1 5/16"
10	KD1132	Dust cap
11	K10503	Jam nut, 5/8-11 right hand thread
	K10504	Jam nut, 5/8-11 Left hand thread
12	K10204	Machine bushing, 5/8" X 1" OD
13	KB0134	Hub
14	KA2014	Bearing (83B607A on bearing)
15	KD11306	Disc blade, 15" dia. X 3.5MM thick
16	KD2589	Inner scraper
17	KA0312	Mount for drop tube
18	H-2100	Hex bolt, 5/16-18 X 1"
	W-1610	Lock washer, 5/16"
19	KA1369	Drop tube for dry fertilizer
20	KD11705	Poly tube extention, for liquid drop tube
21	K10681	Hose clamp, NO. 6
22	KA8685	Drop tube for liquid fertilizer, 3/8" OD
23	H-2120	Hex bolt, 5/16-18 X 1 1/2"
	W-1410	Washer, 5/16" SAE
	N-1101	Lock nut, 5/16-18
24	KA9195	Shank
25	KA0810	Scraper mount
26	KD1673	Scraper
27	CB-2210	Carriage bolt, 3/8-16 X 1"
	W-2210	Washer, 3/8" USS
	W-2610	Lock washer, 3/8"
	N-2001	Hex nut, 3/8-16
28	H-4420	Hex bolt, 1/2-13 X 4 1/2"
	N-4301	Lock nut, 1/2-13
29	H-5501	Hex bolt, 5/8-11 X 5"
	N-5101	Lock nut, 5/8-11
30	KD1138	U-Bolt, 2 1/2" X 2 1/2" X 1/2-13
	W-4610	Lockwasher, 1/2"
	N-4001	Hex nut, 1/2-13
	KA8845	Disc blade assembly Includes disc with bearing & hub riveted on
	K7586X	Complete double disc assembly with mounting bracket and dry fert tube

NOTCHED SINGLE DISC FERTILIZER OPENER

STYLE B

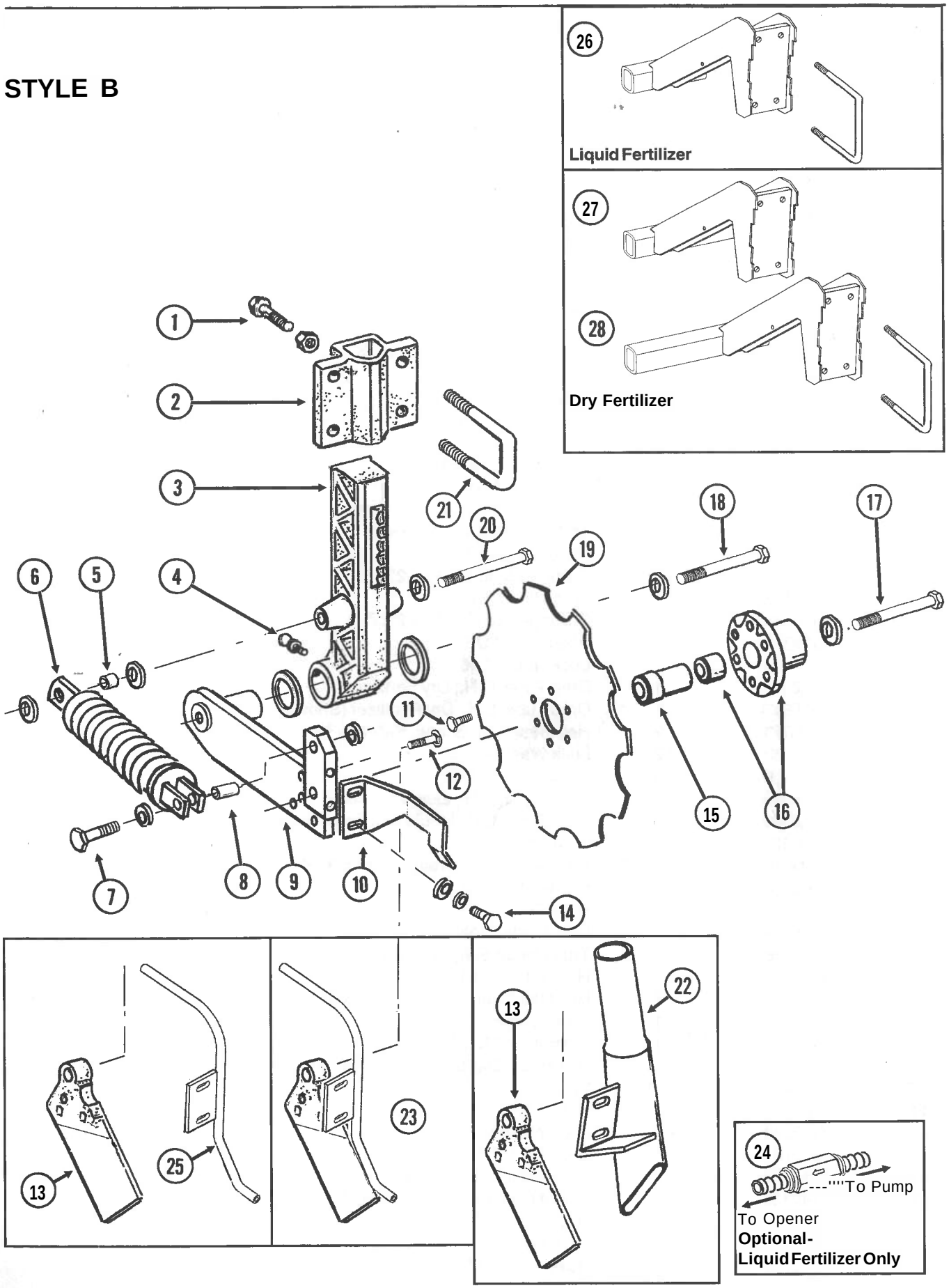

Rev. 9/02

NOTCHED SINGLE DISC FERTILIZER OPENER

ITEM	PART NO.	DESCRIPTION
1.	K10017	Hex Head Cap Screw, 1/2"-13 x I.V2[11]
	K10102	Hex Nut, 1/2"-13
2.	KB0297	Mount
3.	KB0296	Arm, 13 1/2"
4.	K10640	Grease Fitting, 1/4H-28
5.	KD12685	Bushing, W O.D. x V2" Long
6.	KA6966	Compression Spring Assembly
7.	K10047	Hex Head Cap Screw, 3/8"-16 x 1 3/4H
	K10210	Washer, 3/8" USS
	K10108	Lock Nut, 3/8"-16
8.	KD1026	Sleeve, 1 W Long
9.	KA9433	Pivot Arm, L.H. (Shown)
	KA9434	Pivot Arm, R.H.
10.	KD11557	Scraper, L.H. (Shown)
	KD11558	Scraper, R.H.
11.	K10002	Hex Head Cap Screw, 3/8"-16 x 3/4"
12.	K10306	Carriage Bolt, 3/s"-16 x 2"
	K10108	Lock Nut, 3/s"-16
13.	KB0249	Knife, L.H. (Shown)
	KB0248	Knife, R.H.
14.	K10991	Hex Head Cap Screw, 5/i6"-18 x Vs"
	K10232	Lock Washer, Vw"
	K10219	Washer, 5/16" USS
15.	KD12679	Stepped Spacer, 3" Long
16.	KA9437	HubW/Bearing
	KA8603	Double Row Bearing
17.	K10011	Hex Head Cap Screw, 5/8"-11 x 5 1/2"
	-KD12677	Washer, 1 V2" O.D., 7 Gauge, Hardened
	K10107	Lock Nut, 5/8"-11
18.	K10046	Hex Head Cap Screw, 5/8"-11 x 5"
	K10217	Washer, 5/s" USS
	K10450	Machine Bushing, 1 V2", 18 Gauge (As Required)
	K10107	Lock Nut, 5/8"-11
19.	KD12676	Disc Blade, Notched, 16 3/k"
20.	K10871	Hex Head Cap Screw, 1/2"-13 x 6"
	K10206	Washer, 1/2" SAE
	K10111	Lock Nut, 1/2"-13
21.	KD13287	U-Bolt, 1 1/2" x 2 1/2" x 1/2"-13
	K10228	Lock Washer, V2"
	K10102	Hex Nut, 1/2"-13
22.	KA6973	Drop Tube, L.H., Dry Fertilizer (Shown)
	KA6972	Drop Tube, R.H., Dry Fertilizer
23.	KA9461	Knife/Drop Tube, L.H., Liquid Fertilizer (Shown) **(Sub KA8399 And KB0249)**
	KA9462	Knife/Drop Tube, R.H., Liquid Fertilizer **(Sub KA8398 And KB0248)**
24.	KA8983	Check Valve, Low Rate
25.	KA8399	Drop Tube, L.H., Liquid Fertilizer (Shown)
	KA8398	Drop Tube, R.H., Liquid Fertilizer
26.	KA9458	Mount W/U-Bolts, Liquid Fertilizer
	KD1113	U-Bolt, 5" x 7" x 5/8"-11
	K10230	Lock Washer, 5/s"
	KD10104	Hex Nut, 5/8"-11
27.	KA9821	Mount W/U-Bolts, L.H., Dry Fertilizer
	KD1113	U-Bolt, 5" x 7" x 5/8"-11
	K10230	Lock Washer, 5/8"
	KD10104	Hex Nut, 5/s"-11
28.	KA9822	Mount W/U-Bolts, R.H., Dry Fertilizer
	KD1113	U-Bolt, 5" x 7" x 5/s"-11
	K10230	Lock Washer, 5/8"
	KD10104	Hex Nut, 5/8"-11

5 X 5 Adjustable Drive Wheelblock

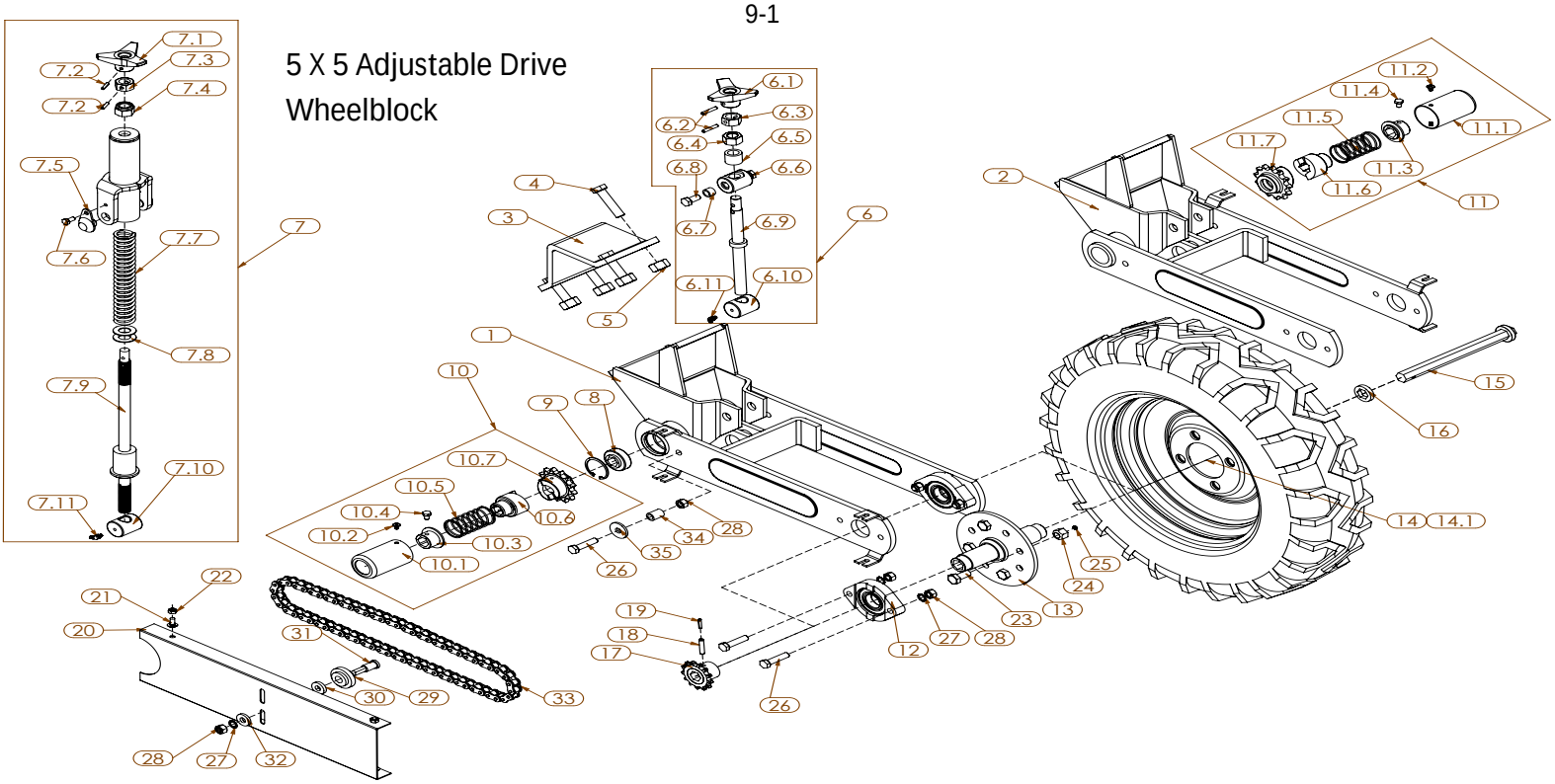

ITEM	PART NUMBER	DESCRIPTION
1	4710.2B	5X5, ADJUSTABLE WHL BLCK, RH
2	4710.1B	5X5, ADJUSTABLE WHL BLCK, LH
3	1534.A	CLAMP, 5 X 5
4	HM-81670	HEX, BOLT, 16 X 70, G8.8
5	NM-72001	NUT, HEX, 20mm, G8.8
6	653611	ADJUSTMENT SCREW ASSY
6.1	7083	KNOB
6.2	10172092	ROLL PIN, 6X35
6.3	4728	HEX NUT, 20MM W/6MM HOLE
6.4	NM-72001	NUT, HEX, 20mm, G8.8
6.5	4711	SPACER BUSHING
6.6	4717	PIVOT PIN
6.7	20019052	BUSHING, 12 ID X 18.5 OD X 13 L
6.8	HM-61225	HEX, BOLT, 12 X 25, G8.8
6.9	4714	ADJUSTING THREADED ROD
6.10	4715	PIVOT PIN
6.11	10118.A	GREASE ZERK, 45°, 6MM
7	650610	SCREW ADJUSTMENT, SPRING LOADED
7.1	7083	KNOB
7.2	301090	ROLL PIN, 5 X 24MM
7.3	4728	HEX NUT, 20MM W/6MM HOLE
7.4	NM-72005	NUT, NYLOCK, 20mm, G8.8
7.5	66005779	PIN, TRUNNION
7.6	HM-2816	HEX, BOLT, 8 X 16, G8.8
7.7	5666.2	SPRING
7.8	10623028	WASHER, 21 X 40 X 2 MM
7.9	4726	THREADED ROD, SPRING LOADED
7.10	4715	PIVOT PIN
7.11	10118.A	GREASE ZERK, 45°, 6MM
8	4659	BEARING, (205KRR2)
9	4660	SNAP RING, INTERNAL, 52MM
10	4467.D	HEX SHAFT SLIP CLUTCH RH
10.1	4313	SLIP CLUTCH PROTECTION TUBE
10.2	10590084	SCREW, FLANGED BUTTON HEAD, M6 X 10
10.3	4312.A	BUSHING & SPRING STOP
10.4	HM-2812	HEX, BOLT, 8 X 12 G8.8

ITEM	PART NUMBER	DESCRIPTION
10.5	4311	SPRING. SLIP CLUTCH
10.6	4310.2A	CLAW, SLIPCLUTCH, RH
10.7	4309.2B	SPROCKET, 13T, RH
11	4467.G	HEX SHAFT SLIP CLUTCH LH
11.1	4313	SLIP CLUTCH PROTECTION TUBE
11.2	10590084	SCREW, FLANGED BUTTON HEAD, M6 X 10
11.3	4312.A	BUSHING & SPRING STOP
11.4	HM-2812	HEX, BOLT, 8 X 12 G8.8
11.5	4311	SPRING. SLIP CLUTCH
11.6	4310.1A	CLAW, SLIPCLUTCH, LH
11.7	4309.1B	SPROCKET, 13T, LH
12	4655	BEARING AND FLANGE
13	4653	HUB
14	900015.1	WHEEL w/ RIM, 5.90 X 15 TIRE
14.1	G170106152	TIRE, 5.90 x 15 STANDARD
15	4654	SPINDLE, HEX
16	4716	SPACER
17	4656.A	SPROCKET, HEX BORE, 13T
18	10173020	ROLL PIN, 8 X 40
19	301090	ROLL PIN, 5 X 24MM
20	4658.A	ADJUSTABLE DRIVE WHEEL SHIELD
21	10561053	CARRIAGE BOLT, 8 X 18MM
22	NM-1801	NUT, HEX, 8mm, G8.8
23	1277	BOLT, HEX 14 X 30 MM
24	1277.3	LUG NUT, 14 MM
25	NM-0501	NUT, HEX, JAM, 5mm, G8.8
26	HM-61250	HEX, BOLT, 12 X 50, G10.9
27	10629013	WASHER, ET LOCK, 12mm
28	NM-31201	NUT, HEX, 12mm, G8.8
29	4319	IDLER
30	10621056	WASHER, FLAT, 13 X 30 X 6
31	4320	BOLT, CHAIN TENSIONER, 12MM
32	10621055	WASHER, FLAT, 13 X 30 X 5
33	4657.A	CHAIN, 12BR/#60, 66P, W/ CL
34	9658	BUSHING, 12 ID X 18 OD X 25 L
35	10621061	WASHER, FLAT, 13 X 40 X 4

HITCH

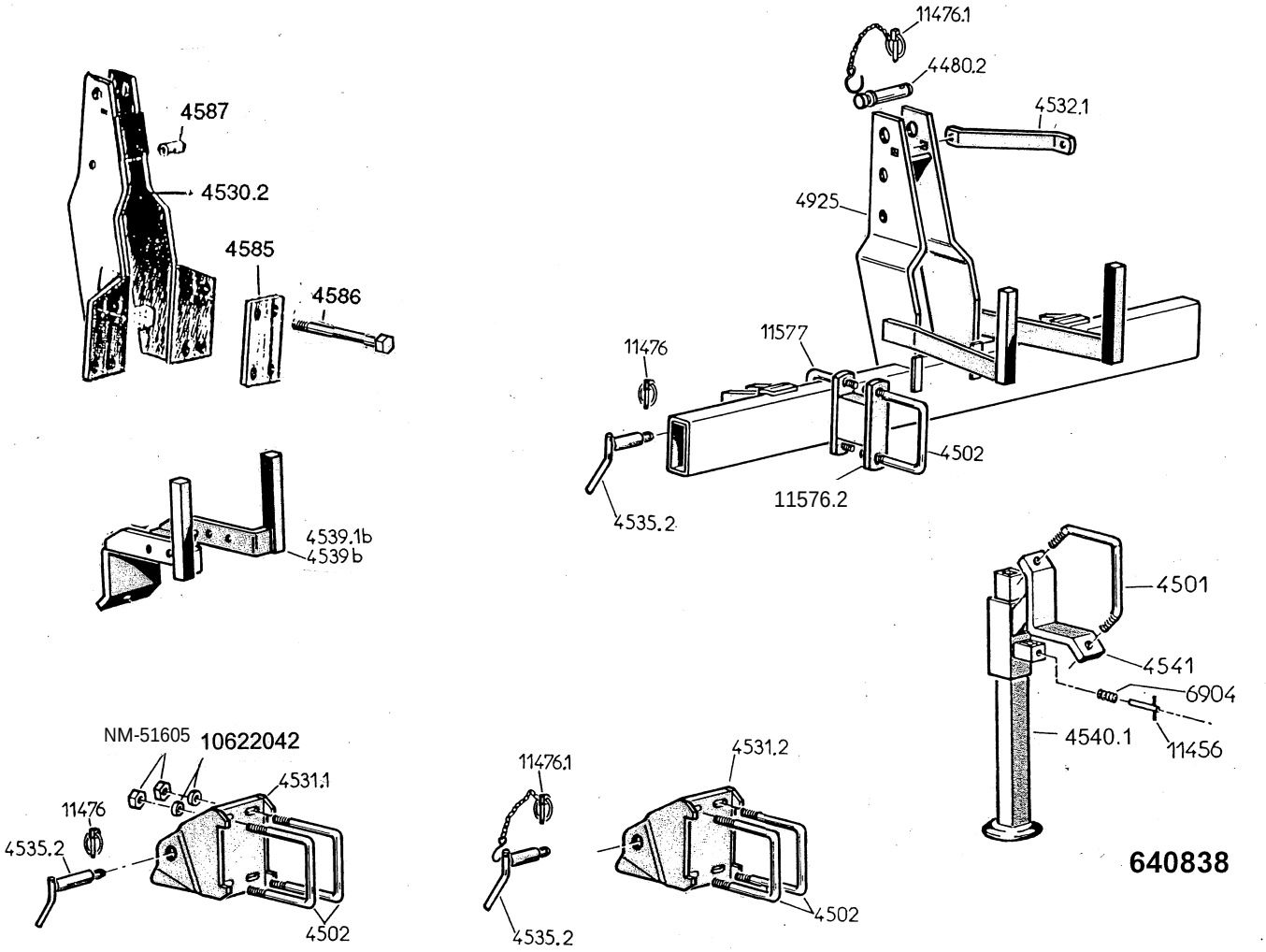

4480.2	Upper hitch pin, 1"dia. CAT II
4501	V bolt, 5x5, 16mm
4502	U bolt, 5x5, 16mm
NM-51605	Nylon lock nut, 16mm
4530.2	Hitch mast
4531.1	Lower 3 pt. Hitch bracket, LH
4531.2	Lower 3 pt. Hitch bracket, RH
4532	Support strap, turbofan
4532.1	Support strap, turbofan
4535.2	Lower hitch pin, 1-1/8" dia., CAT II
4539.B	Gearbox mounting bracket with turbofan stand
4539.1B	Gearbox mounting bracket without turbofan stand
4540.1	Jack stand, 26" tall
4541	Mounting bracket, jack stand
4585	Reinforcement hitch plate
4586	Hex head bolt, 20 x 180mm
NM-72005	Nylon lock nut, 20mm
4587	Bushing
4925	Hitch with turbofan mounting brackets
6904	Spring
11456	Pin, for jack stand, takes roll pins 3x20 and 6x45
10172021	Roll pin, 3x20
10172094	Roll pin, 6x45
11476	Lynchpin, 9mm
11476.1	Lynchpin, 9mm with chain
11576.2	Hitch spacer
11577	U bolt, 4-3/4" x 2-1/2", 16mm
10622042	Flat washer, 17x30x4
640838	Complete jack stand assembly

HITCH
DOUBLE TOOLBAR

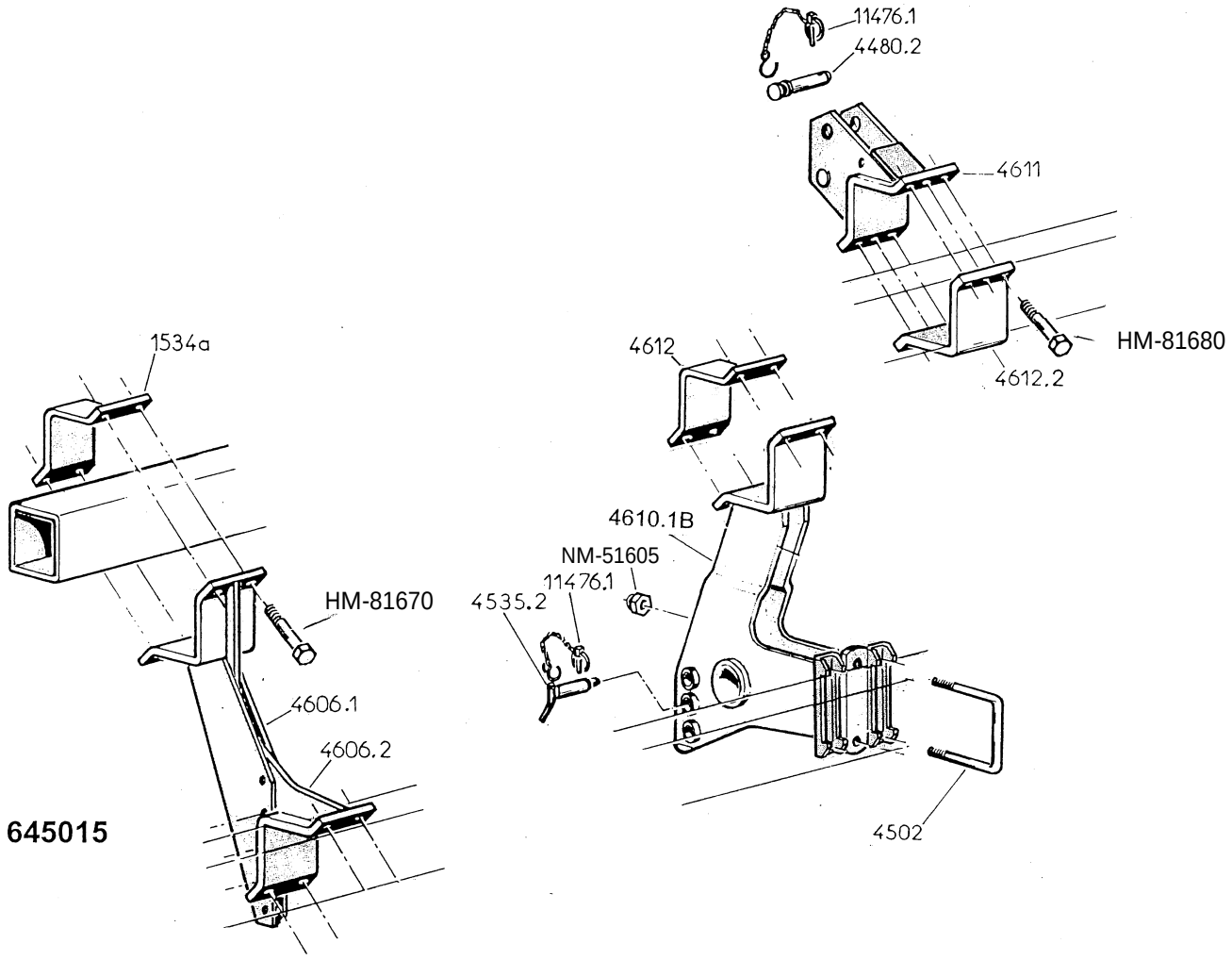

1534.A	Counter clamp, 12mm wide with 4 holes
4480.2	Upper hitch pin, 1" dia., CAT II
4502	U bolt, 5x5, 16mm
NM-51605	Nylon lock nut, 16mm
4535.2	Lower hitch pin, 1-1/8" dia., CAT II
4606.1	Toolbar spacer, upper
4606.2	Toolbar spacer, lower
4610.1B	Double toolbar hitch with CAT II holes and reinforced brackets
4611	Upper 3pt. Hitch bracket, with permanent CAT II pin
4612	Counter clamp, 140mm wide w/4 holes
4612.2	Counter clamp, 140mm wide w/6 holes
HM-81670	Hex head bolt, 16 x 70mm, Gr 8
HM-81680	Hex head bolt, 16 x 80mm, Gr8
11476.1	Lynchpin, 9mm with chain

645015 Spacer package:
1 - pair of spacers; 2 - 4606.1 & 4606.2
1 - pair of clamps; 2 - 1534.A
with hardware

GEAR BOX

4325.C	Three sprocket lower cluster (10, 12, & 14 teeth)
4326.4	Six sprocket upper cluster (10, 11, 13, 17, 19, & 21 teeth) requires 10x15 bolt to lock in place
4327.A	Drive chain, 13N (36 links w/conn link)
4507.C	Gearbox housing
4508.B	Chain idler support frame
4509.B	Lever lock
4510.B	Lever (secures with 6x25 roll pin)
4511.B	Chain idler roller (with 5021 bushing)
4512.A	Idler roller shaft
180039	Bearing complete with flanges
300597	Bearing (205KRRB2 ref. #)
300596	Flangette, two piece, three bolt hole
4517	Toolbar cap, 5x5
4519	Gearbox shield
4522.1A	Support bracket, left
4522.2A	Support bracket, right
4537	Pin for shield
4539.B	Gearbox mounting bracket with turbofan stand
4539.1B	Gearbox mounting bracket without turbofan stand
4584	Knob for lever
4612.3	Counter clamp
4621	Gearbox cover
5501	Spring
5021	Self lubricated bushing
9147	Spring for chain tightener
10172090	Roll pin, 6x25
10502012	Bolt, 10x15 (to secure sprocket cluster)
10622024	Washer, 16.5x26x1

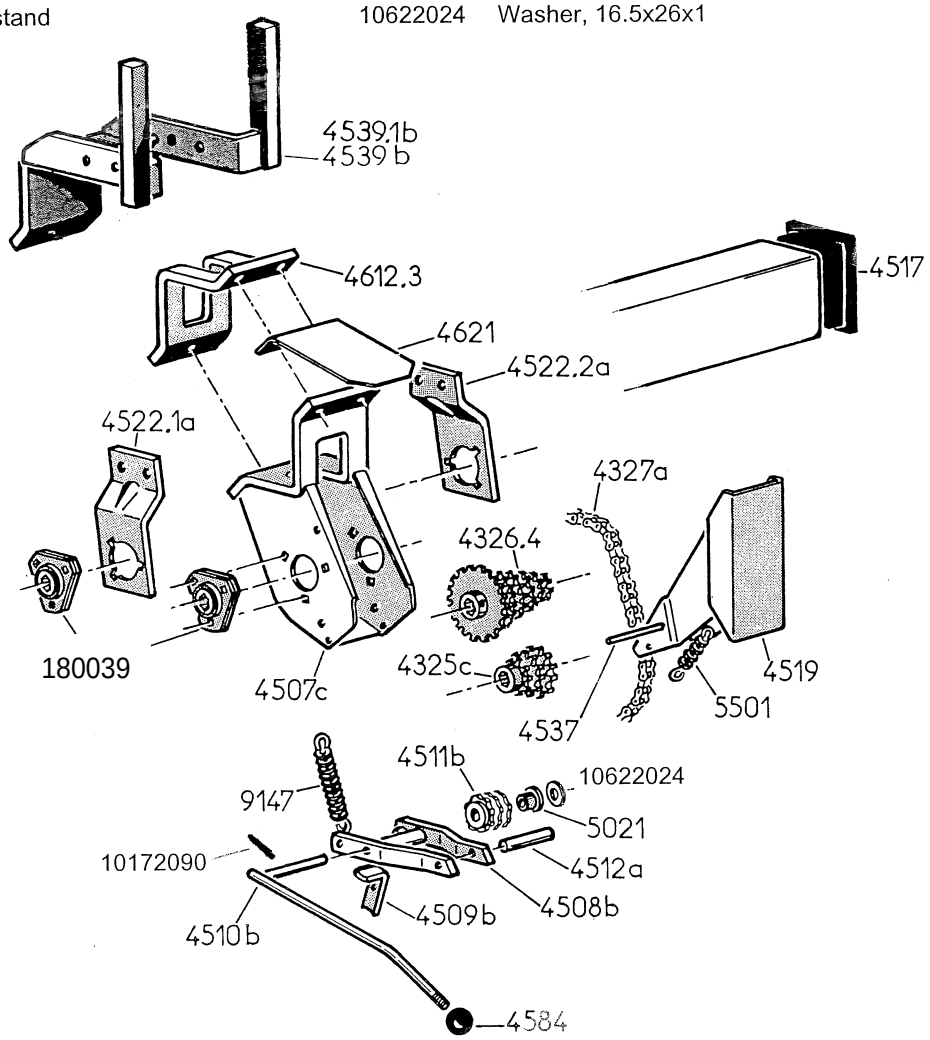

STANDARD TURBOFAN

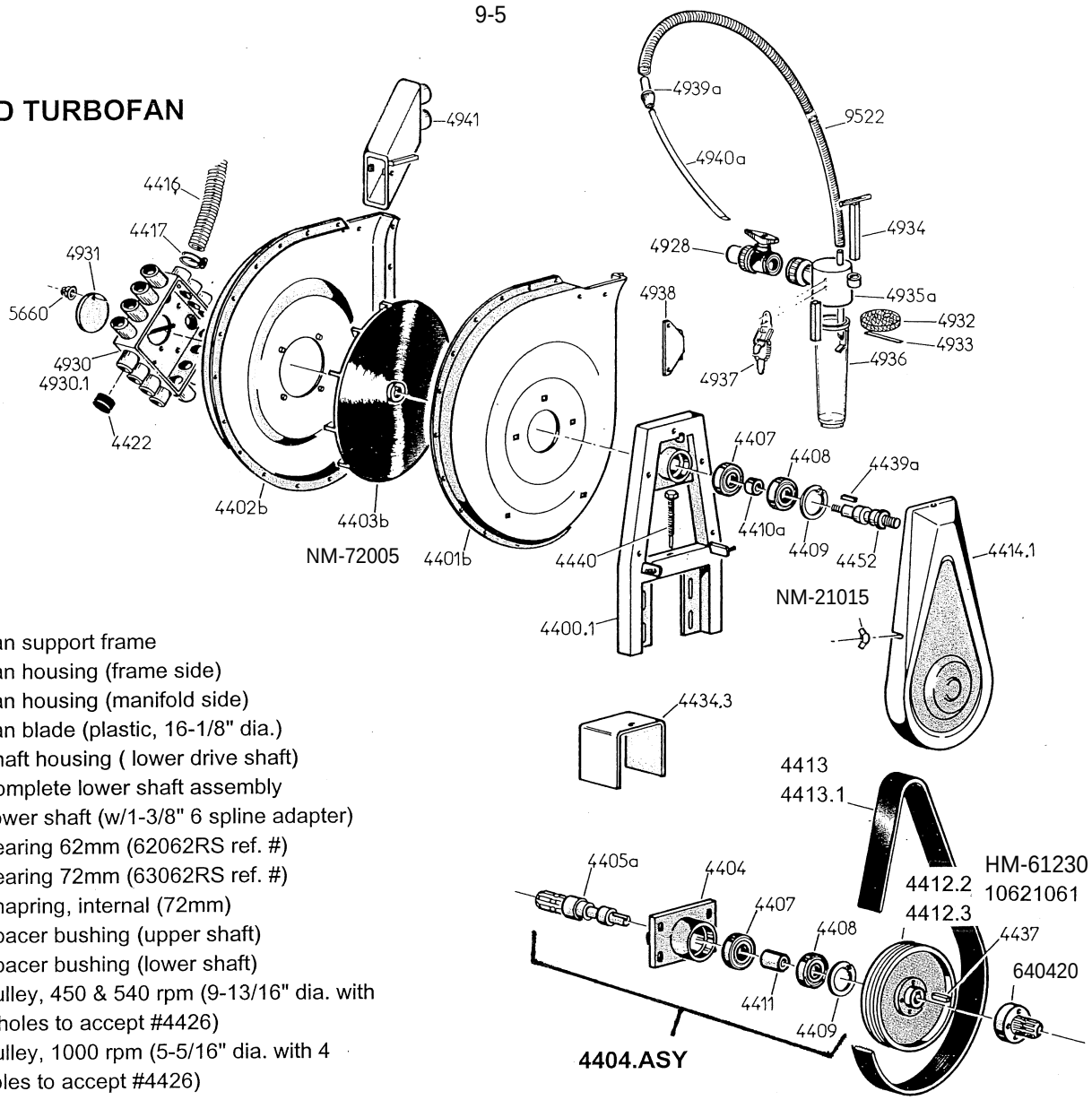

4400.1	Fan support frame
4401.B	Fan housing (frame side)
4402.B	Fan housing (manifold side)
4403.B	Fan blade (plastic, 16-1/8" dia.)
4404	Shaft housing (lower drive shaft)
4404.ASY	Complete lower shaft assembly
4405.A	Lower shaft (w/1-3/8" 6 spline adapter)
4407	Bearing 62mm (62062RS ref. #)
4408	Bearing 72mm (63062RS ref. #)
4409	Snapring, internal (72mm)
4410.A	Spacer bushing (upper shaft)
4411	Spacer bushing (lower shaft)
4412.2	Pulley, 450 & 540 rpm (9-13/16" dia. with 4 holes to accept #4426)
4412.3	Pulley, 1000 rpm (5-5/16" dia. with 4 holes to accept #4426)
4413	Belt, 450 & 540 rpm (PJ1168/460J or 460J19)
4413.1	Belt, 1000 rpm (PJ955/376J)
4414.1	Cover shield for belt
4416	Vacuum hose, 34mm ID (specify length)
519039	Vacuum hose (one roll of 82 ft.)
4417	Hose clamp
4422	Plastic cap
640420	Pump pulley (6 spline stub shaft)
4434.3	Safety shield
4437	Key stock for lower shaft (8x7x40mm)
4439.A	Key stock for upper shaft (6x6x45mm)
4440	Tension adjustment bolt (14mm)
4452	Upper shaft, 540 & 1000 rpm (1-1/8" dia.pulley)
4452.1	Upper shaft, 450 rpm (7/8" dia.pulley)
4928	Hand valve
4930	Manifold, 19 outlet
4930.1	Manifold, 28 outlet
4931	Choke plate
4932	Filter pad
4933	Retaining strap
4934	Adjustment wrench
4935	Old style cannister top, replaced by #4935.A
4935.A	Clean out cannister top
4936	Clean out cannister bowl
4937	Latch
4938	Mounting bracket for cannister
4939.A	Plastic adaptor for wand (replaces #4939)
4940.a	Wand, 12mm ID, 14mm OD (replaces #4940)
4941	Fan outlet
5660	Spring
9555	Hose, 18mm ID (specify length)
NM-21015	Nylon locknut, 10mm
NM-72005	Nylon locknut, 20mm (to secure blade)
HM-61230	Hex bolt, 12x30 (to secure pulley)
10621061	Washer, 13x40x4 (to secure pulley)
10623042	Washer, 22.5x48x3 (on upper shaft
10624018	Washer, 31x41x3 (behind pulley

HI-OUTPUT TURBOFAN

4400.1A	Fan support frame
4401.B	Fan housing (frame side)
4402.C	Fan housing (manifold side)
4403.D	Fan blade (aluminum, 17-3/4" dia.)
4404.A	Shaft housing (lower drive shaft)
4405.A	Lower shaft (w/1-3/8" 6 spline adapter)
4407	Bearing 62mm (62062RS ref. #)
4408	Bearing 72mm (63062RS ref. #)
4409	Snapring, internal (72mm)
4410.A	Spacer bushing (upper shaft)
4411	Spacer bushing (lower shaft)
4412.A	Pulley, 500 rpm (11-3/8" dia. with 4 holes to accept #4426)
4412.1A	Pulley, 1000 rpm (5-7/8" dia. with 4 holes to accept #4426)
4413.A	Belt, 500 rpm (PJ1245/490J)
4413.1A	Belt, 1000 rpm (PJ991/390J)
4414.1A	Cover shield for belt
640420	Pump pulley (6 spline stub shaft)
4429.A	Outlet shield
4434.3	Safety shield
4437	Key stock for lower shaft (8x7x40mm)
4439.A	Key stock for upper shaft (6x6x45mm)
4440	Tension adjustment bolt (14mm)
4452.A	Upper shaft (1-1/8" dia. pulley)
4455	Pivot pin
6089	Rubber ring
6090	Snap ring, 6mm
F40167	Nylon locknut, 10mm
650444	Complete lower shaft assembly
NM-21015	Nylon locknut, 10mm
NM-72005	Nylon locknut, 20mm (to secure blade)
HM-61230	Hex bolt, 12x30 (to secure pulley)
10621061	Washer, 13x40x4 (to secure pulley)
10623042	Washer, 22.5x48x3 (on upper shaft
10624018	Washer, 31x41x3 (behind pulley
	Hardware for pump pulley (#4426)
HM-65110	Hex bolt, 12x110
HM-2850	Hex bolt, 8x50 (Qty. 4)
10629013	External tooth lock washer (12x20)
10629009	External tooth lock washer (8x14, Qty. 4)

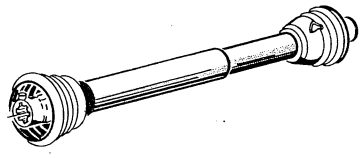

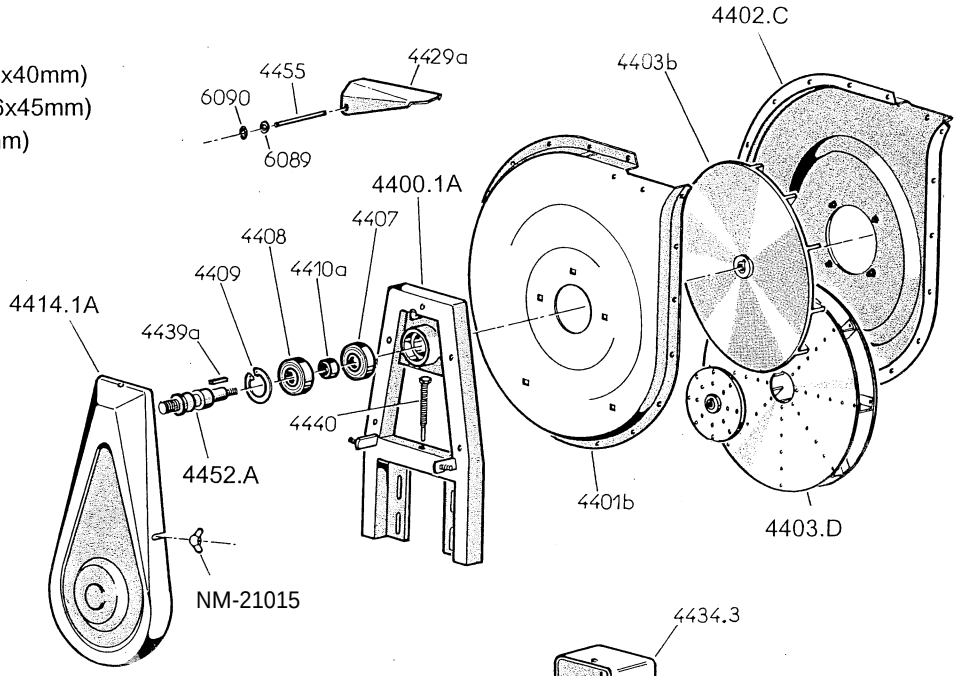

PTO DRIVE LINES

4428.B	540 RPM complete, 24"
4431.B	540 RPM complete, 36"
4428.B21	1000 RPM (21 spline) complete, 24"
4431.B21	1000 RPM (21 spline) complete, 36"
B41201	Cross & bearing kit (for above drive lines)

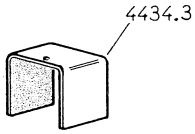

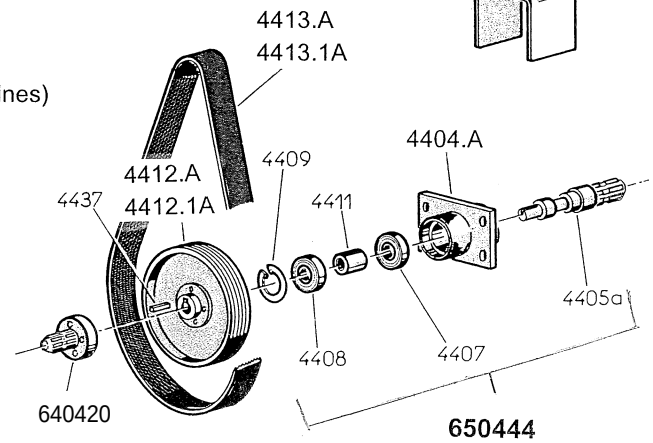

SECONDARY AIR SYSTEM & GAUGES

4451	Plastic cap
300526	Hose clamp
4454	Hose, 40mm ID (specify length)
4647.SS	U bolt, 12mm
4943	Aluminum tubing, 40mm OD (specify length)
4944	Cross tee
4944.1	Clear tubing, 40mm OD x 3" long
4945	Plastic stub, 40mm OD x 2-3/4" long
300667	U bolt, 8mm
800326	Support bracket
4949	Nipple
4950	Rubber grommet (requires a 12mm hole in tubing)
4951	Cap for nipple
4948.AM	Clear vinyl hose, 5/16" ID x 7/16" OD (specify length, standard application is 4 feet)

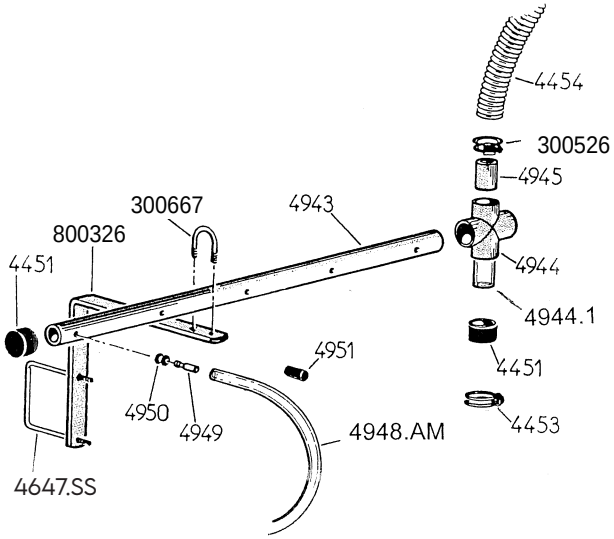

K17-P734-004	Air gauge, 0-20 oz./sq. in.
900265	Hose kit (contains the following)
	3' - JPT06 tubing, 3/8"
	1 - J3300BH04094, bulkhead connector
	1 -T279PP-6-4, poly-push fitting
	1 -T279PP-6-2, poly-push swivel fitting

D2040.ASY - consists of:

D2040	1	Vacuum gauge
D200108-00	1	Filter vent plug
H-1075	2	1/4-20 x 3/4" bolt
N-0610	2	1/4-20 nylon locknut
M30050070	1	Mounting plate
F27295	3	6-32 x 3/8" screw
900244	1	Hose kit:
		2' - JPT04 tubing, 1/4"
		2 - J69PPS-4-2, swivel fittings

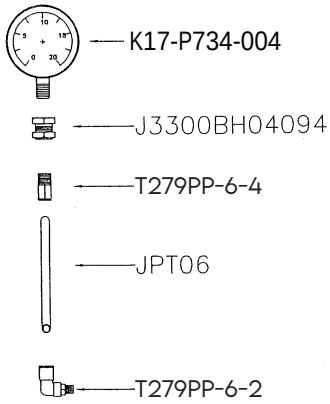

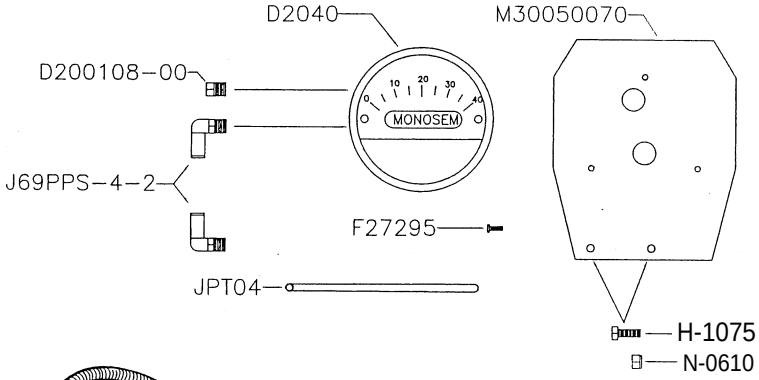

643399 Complete seed cleanout system with 8-1/2' of #9522 hose shown at right

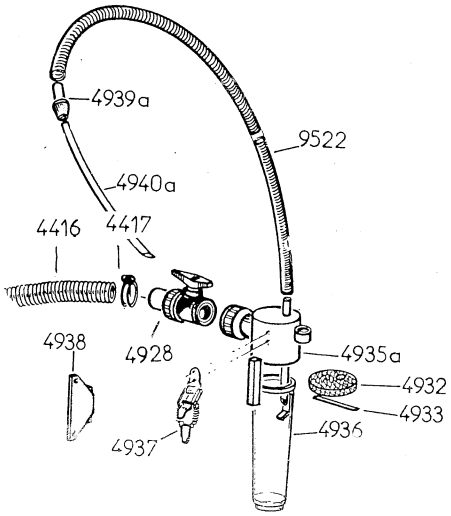

201173- Adapter to use MS seed cleanout with NG+ planter

MS SHOES

6500	Standard shoe with cast point and wind flap
651052	Double shoe, 2-3/4" row width
651072	Double shoe, 2" row width
6500.6	US shoe, with sharp narrow V cast point and wind flap
6501.D	Cast tip, right hand, double shoe
6501.DN	UHMW tip, right hand, double shoe
6501.G	Cast tip, left hand, double shoe
6501.GN	UHMW tip, left hand, double shoe
6517	Rubber wind flap, for 6500 shoe
6517.S	Rubber wind flap, for 6500.6 shoe
6590	Shoe frame only, 2" double shoe
6591.D	Side panel, double shoe, right side
6591.G	Side panel, double shoe, left side
6592.1	Spacer, side panel, 2" double shoe
6592.2	Spacer, side panel, 2-3/4" double shoe
6593	Shoe frame only, 2-3/4" double shoe
7144	Cast shoe tip, on 6500
7144.2	Cast shoe tip, on 6500.6
10176003	Rivet, 5 x 34, for 7144 & 7144.2
900316	Spacer block, 1/4" thick
100650	Adjustable shoe w/cast point, right hand
100651	Adjustable shoe w/cast point, left hand
HM-2816	Hex head bolt, 8 x 16mm
HM-2870	Hex head bolt, 8 x 70mm
HM-2890	Hex head bolt, 8 x 90mm
HM-41070	Hex head bolt, 10 x 70mm
NM-1801	Hex nut, 8mm
NM-21011	Hex nut, 10mm

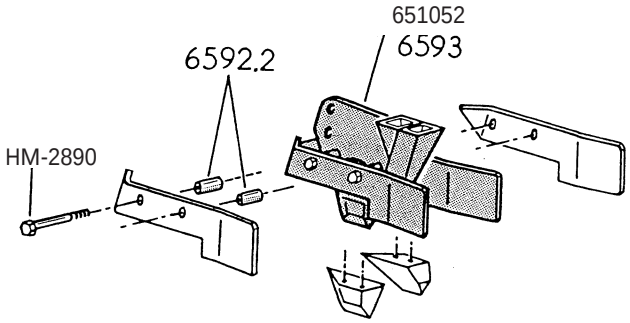

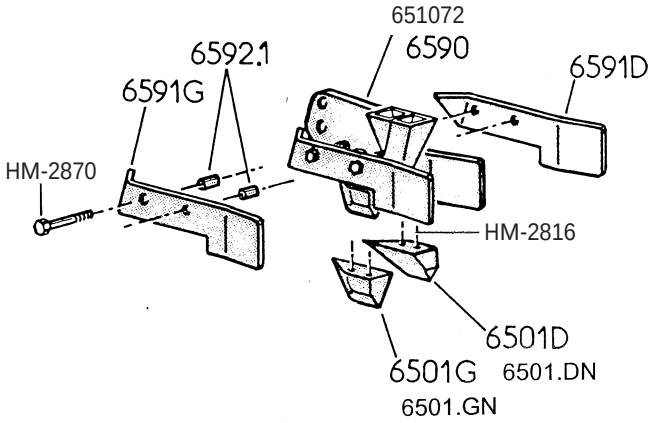

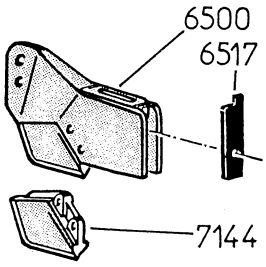

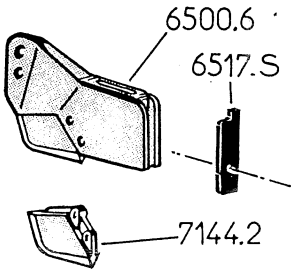

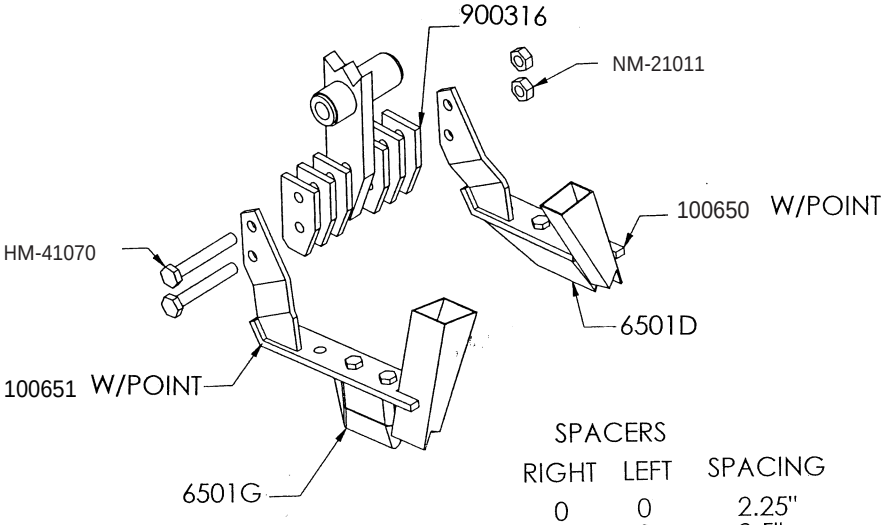

SPACERS

RIGHT	LEFT	SPACING
0	0	2.25"
1	0	2.5"
1	1	2.75"
2	1	3"
2	2	3.25"
3	2	3.5"
3	3	3.75"

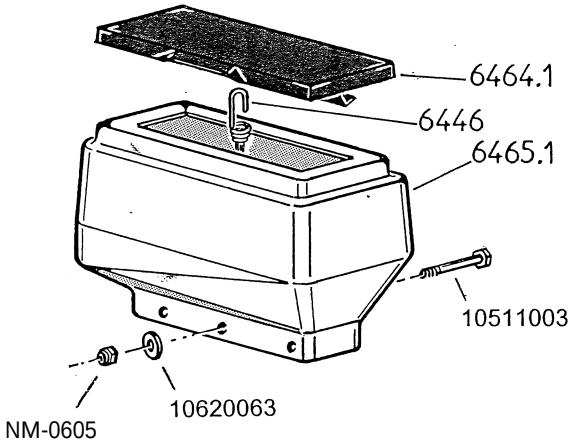
6464.1
6446
6465.1
10511003
10620063
NM-0605

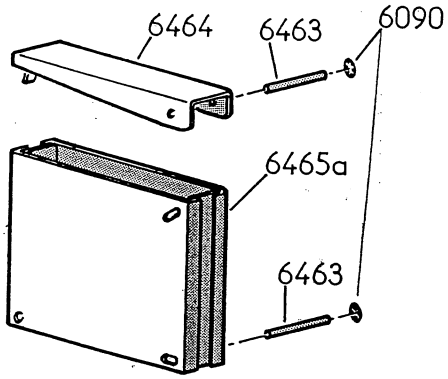
6464
6463
6090
6465a
6463

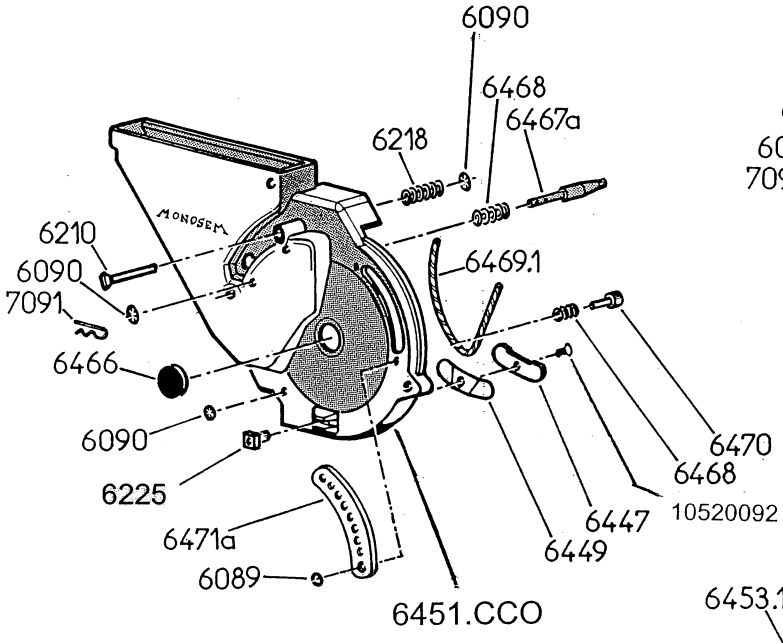
6090
6468
6467a
6218
6210
6090
7091
6466
6469.1
6090
6225
6471a
6089
6470
6468
10520092
6447
6449
6451.CCO

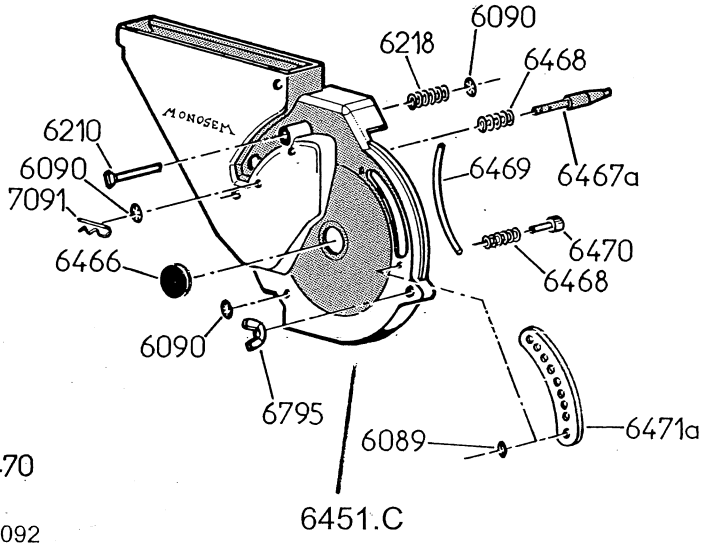
6090
6218
6468
6210
6090
7091
6469
6467a
6466
6470
6468
6090
6795
6089
6471a
6451.C

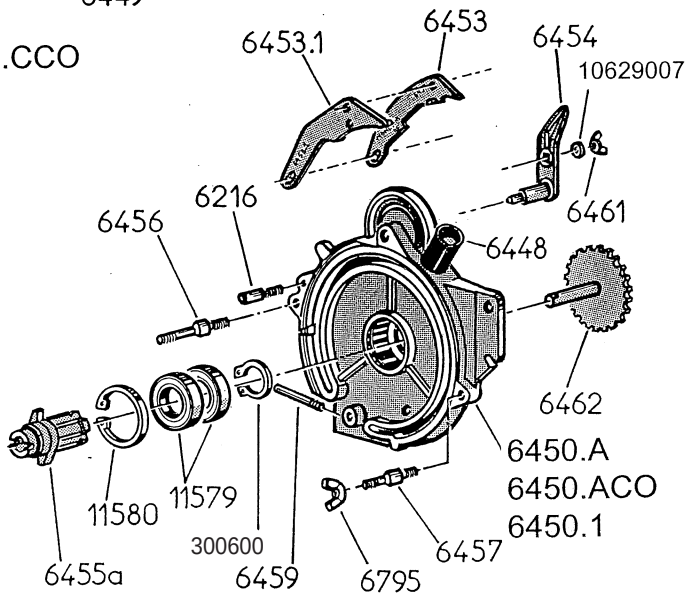
6453.1
6453
6454
10629007
6216
6461
6456
6448
6462
6450.A
6450.ACO
6450.1
11580
11579
300600
6457
6455a
6459
6795

MS METER BOX

Part #	Description
6089	Rubber ring
6090	Snapring, 6mm
6210	Pressure pin for scraper
6216	Pin that scraper pivots on
6218	Spring for pressure pin
6222	Bolt for agitator, 5mm
6245	Threaded block, 6mm
6225	Bungi cord for lid
6447	Brass ejector plate
6448	Tube for connecting vacuum hose
6449	Spring plate for 6447
6450.A	Housing shell only
6450.ACO	Housing complete w/bearings, pins, etc..
6450.1	Housing complete w/bearings, pins, etc.. for Version D application (front box)
6451.CCO	Cover, with brass ejector & rope seal
6451.C	Cover (old style, no longer available)
6452.A	Agitator for seed disc
6453	Seed scraper/singulator
6453.1	Seed scraper/singulator for 2nd row of holes
6454	Adjustment lever for scraper settings
6455.A	Main shaft
6456	Rear alignment pin for cover, 8mm
6457	Front alignment pin for cover, 8mm
6459	Nipple for pressurized air line
6461	Wing nut, 6mm
6462	Drive sprocket, 21 tooth 5R chain secured with 6x25 roll pin (10172090)
6463	Pin, for mounting metal hopper & lid
6464	Lid for metal hopper (1.5L)
6464.1	Lid for plastic hopper
6465.A	Metal 1.5L seed hopper
6465.1	Plastic 3L seed hopper
6466	Plastic plug for cover
6467.A	Selector pin
6468	Spring
6469	Rubber seal
6469.1	Cotton rope seal
6470	Ejector pin
6471.A	Plastic shutter window
6795	Wing nut, 8mm
300600	Snapring, 30mm external
7091	Hair clip pin
11579	Bearing for main shaft (60062RS)
11580	Snapring, 55 mm internal
10172090	Roll pin, 6x25
10520092	Countersunk head screw, 6x16
10511003	Bolt, 6x60
10620063	Washer, 8.5x16x1.5
10629007	Lock washer, 6mm
NM-0605	Nylon locknut, 6mm

Part #	Description
643508	Plastic 3L hopper & lid complete

Complete Meter Box is less hopper

653215	Ver A-C Meter box complete
653223	Ver D Rear Meter box complete
653224	Ver D Front Meter box complete

SEED DISC IDENTIFICATION

First two or three numbers indicate the number of holes in the disc. The last two numbers indicate the size of the holes, in mm.

EXAMPLE:

M3612 - 36 holes; 1.2mm dia. holes
M12008 - 120 holes; .8mm dia. holes
2M7222 - 2 rows of 72 holes; 2.2mm dia. holes

To order a seed disc complete with agitator 6452.A use MC instead of M.

EXAMPLE:

M3612 - is disc only
MC3612 - is disc with agitator mounted to it

Discs available

Single line discs		Double line discs	
M1812	M7218	2M3612	2M7222
M1818	M7222	2M3622	2M12007
M1820	M12007	2M6012	2M12010
M3610	M12008	2M6018	2M12012
M3612	M12010	2M7207	2M12015
M3618	M12012	2M7208	2M12018
M3622	M12018	2M7210	2M12020
M6006	M12020	2M7212	2M18007
M6007	M12022	2M7218	2M18012
M6012	M18007		
M6018	M18010		
M6020	M18012		
M6022			
M7208			
M7209			
M7210			
M7212			

ROW UNIT - VERSION A & C

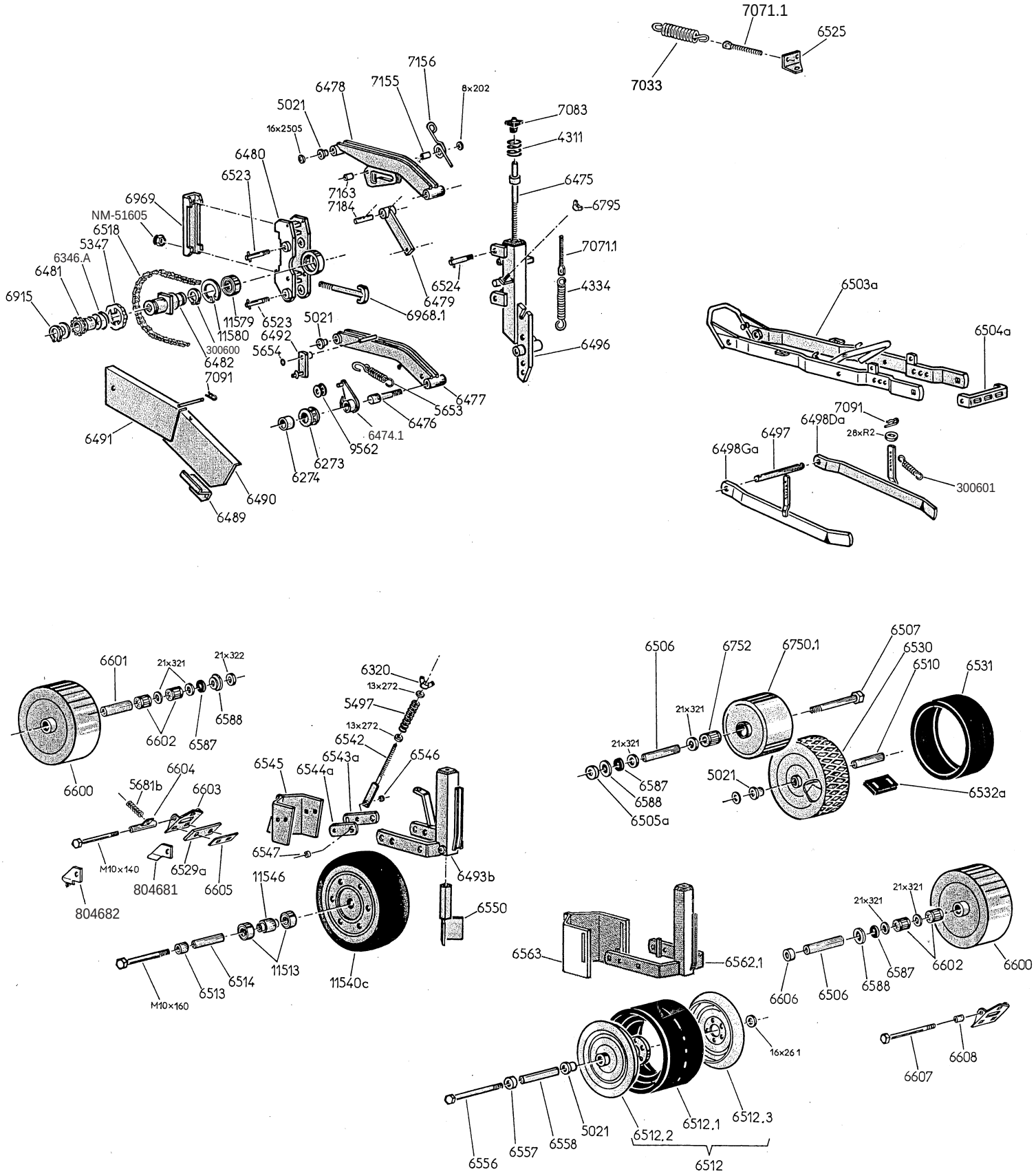

ROW UNIT - VERSION A & C

4311	Handwheel spring
4334	Spring
NM-51605	Nylon locknut, 16mm
5021	Self lubricated bushing
300601	Spring
6346.A	Spring
5347	Handwheel, clutch
5497	Spring
5653	Spring
5654	Stop snapring, 12mm
5681.B	Scraper spring
6273	Idler roller, cast iron
6274	Self lubricated bushing
6320	Wing nut, 12mm
6474.1	Chain idler bracket
6475	Depth adjustment screw
6476	Pin, lower arm, rear
6477	Lower parallel arm
6478	Upper papallel arm
6479	Lock up bracket
6480	Unit head
6481	Drive sprocket, 14 teeth, #5R
6482	Declutching tube
6489	Chain guard holder
6490	Lower chain guard
6491	Upper chain guard
6492	Articulated housing bracket
6493.B	Front press wheel bracket
6496	Central block
6497	Pivot pin, press wheel frame
6498.DA	Hiller blade, right hand
6498.GA	Hiller blade, left hand
6503.A	Press wheel carrier frame
6504.A	Rear frame tie
6505.A	Spacer bushing, 20 x 30 x 9mm
6506	Wheel shaft, 12 x 20 x 140mm
6507	Axle bolt, 10 x 170
6510	Wheel shaft, 11 x 16 x 139mm
6512	Press wheel, rubber, 250 x 145
6512.1	Tire only
6512.2	Rim half, LH w/threaded hub
6512.3	Rim half, RH
6513	Spacer bushing, 16 x 21 x 21mm
6514	Wheel shaft, front, 11 x 16 x 113mm
6515	Front axle bolt, 10 x 160
6518	Unit drive chain, 5R, 120 links
6523	Pin, upper & lower parallel arms, front
6524	Pin, upper parallel arm, rear
6525	Bracket, up pressure spring
6529.A	Greenflex scraper, 112mm wide
6530.ASY	Wire mesh wheel, 4-1/2" wide
6531	Tire, for mesh wheel
6532.A	Scraper, for mesh wheel
6542	Adjustment rod, clod remover
6543.A	Clod remover bracket, right
6544.A	Clod remover bracket, left
6545	Clod remover
6546	Spacer bushing, 11 x 16 x 7mm
6550	Intermediate clod remover
6556	Axle bolt, 10 x 200
6557	Spacer bushing, 16 x 25 x 15mm
6558	Wheel shaft, 11 x 16 x 164mm
6562.1	Front press wheel bracket for 6512
6563	Clod remover for 6562.1
6587	Rubber washer
6588	Shoulder washer
6600	Stainless steel wheel, 250 x 105
6601	Wheel shaft, 11 x 20 x 114mm
6602	Roller bearing, 20 x 31 x 43mm
6603	Scraper holder
6604	Support tube for scraper
6605	Scraper backing plate, SS
6606	Spacer bushing, 20 x 30 x 15mm
6607	Axle bolt, 10 x 185
6608	Support for scraper holder
804681	Sidewall scraper, RH
804682	Sidewall scraper, lH
6750.1	Stainless steel wheel, 210 x 100
6752	Roller bearing, 20 x 31 x 50mm
6795	Wing nut, 8mm
300600	Snapring, external 30mm
6968.1	T Bolt, with nut, 16mm
6969	Clamp facing, 5x5 toolbar
7033	Spring, up pressure
7071.1	Tension rod, 10mm
7083	Hand wheel knob, depth control
7091	Hitch pin clip
7155	Bushing, 11 x 16 x 7mm
7156	Spring, for unit lock up
7163	Bushing, for spring, 9 x 13 x 20mm
7184	Pin for lift stop
9562	Chain roller, plastic
11513	Bearing, 62042RS
11540.C	Press wheel, 300 x 100, w/rubber tire
11540.1	Tire only, 300 x 100
11546	Bushing spacer for bearing #11513
11579	Bearing, 60062RS
11580	Snapring, internal 55mm
10620070	Flat washer, 8.5x20x2
10621046	Flat washer, 13x27x2
10622023	Flat washer, 16.5x25x.5
10623009	Flat washer, 21x32x1
10623011	Flat washer, 21x32x2
10629050	Flat washer w/slot, 18x27x7x2

ROW UNIT - VERSION D

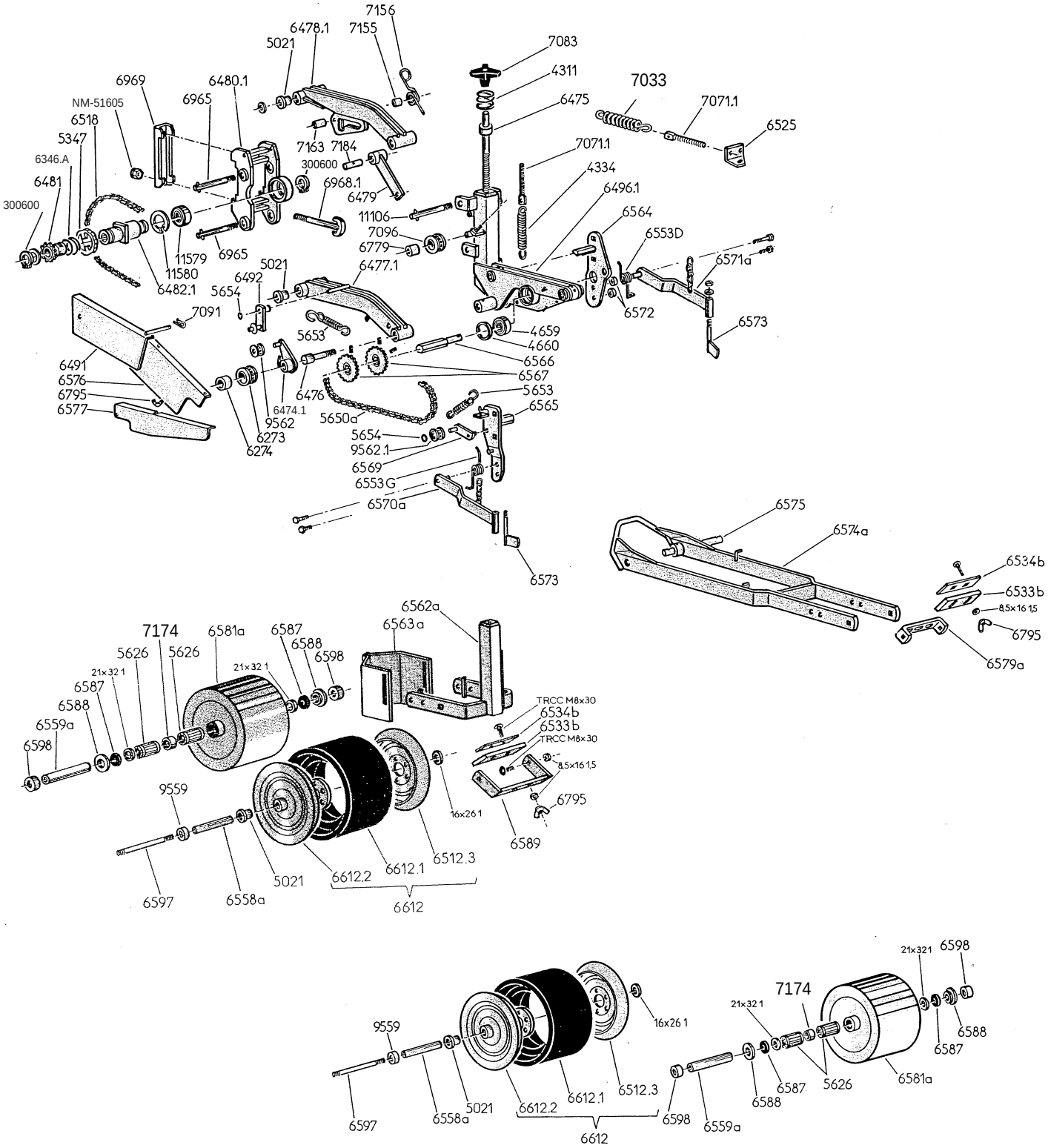

ROW UNIT - VERSION D

4311	Handwheel spring
4334	Spring
NM-51605	Nylon locknut, 16mm
4659	Bearing, 205KRR2
4660	Snapring, internal, 52mm
5021	Self lubricated bushing
6346.A	Spring, lock out clutch
5347	Handwheel, lock out clutch
5626	Roller bearing, 20 x 31 x 70mm
5650.A	Chain, for rear meter box, 5R, 68 links
5653	Spring
5654	Stop snapring, 12mm
6273	Idler roller, cast iron
6274	Self lubricated bushing
6474.1	Chain idler pivot bracket
6475	Depth adjustment screw
6476	Pin, lower arm, rear
6477.1	Lower parallel arm
6478.1	Upper parallel arm
6479	Lock up bracket
6480.1	Unit head
6481	Drive sprocket, 14 teeth, #5R
6482.1	Declutching tube
6491	Upper chain guard
6492	Articulated housing bracket
6496.1	Central block
6518	Unit drive chain, 5R, 120 links
6525	Bracket, up pressure spring
6533.B	Scraper backing plate, SS
6534.B	Greenflex scraper, 170mm wide
6553.D	Spring, hiller blade, RH
6553.G	Spring, hiller blade, LH
6558.A	Wheel shaft, 11 x 16 x 195mm
6559.A	Wheel shaft, 11 x 20 x 195mm
6562.A	Front press wheel bracket
6563.A	Clod remover
6564	Front meter box carrier plate
6565	Rear meter box carrier plate
6566	Shaft, intermediate meter box
6567	Sprocket, 21T, 5R chain
6567.1	Sprocket, 23T, 5R chain
6569	Chain idler bracket, rear chain
6570.A	Hiller bracket, LH
6571.A	Hiller bracket, RH
6572	Shoe spacer bushing, 12 x 25 x 16mm
6573	Hiller blade
6574.A	Rear press wheel carrier frame
6575	Pivot pin, press wheel carrier frame
6576	Lower chain guard
6577	Rear chain guard
6579.A	Bracket, rear scraper mounting
6581.A	Stainless steel wheel, 250 x 170
7174	Spacer bushing, 20 x 27 x 22mm wide
6587	Rubber washer
6588	Shoulder washer
6589	Bracket, front scraper mounting
6597	Axle, threaded ends, 10 x 235mm
6598	Spacer bushing, 20 x 30 x 13mm wide
6612	Press wheel, rubber, 250 x 170
6612.1	Tire only
6612.2	Rim half, LH w/threaded hub
6612.3	Rim half, RH
6779	Self lubricated bushing
6795	Wing nut, 8mm
300600	Snapring, external 30mm
6965	Pin, upper & lower parallel arms, front
6968.1	T Bolt, with nut, 16mm
6969	Clamp facing, 5x5 toolbar
7033	Spring, up pressure
7071.1	Tension rod, 10mm
7083	Hand wheel knob, depth control
7091	Hitch pin clip
7096	Chain roller, cast iron
7155	Bushing, 11 x 16 x 7mm
7156	Spring, for unit lock up
7163	Bushing, for spring
7184	Pin for lift stop
9559	Spacer bushing, 17 x 25 x 10mm wide
9562	Chain roller, plastic
9562.1	Chain roller, plastic w/countersunk hole
11106	Pin, upper parallel arm, rear
11579	Bearing, 60062RS
11580	Snapring, internal 55mm
CBM-2830	Carriage head bolt, 8x30mm
10620063	Flat washer, 8.5x16x1.5
10622024	Flat washer, 16.5x26x1
10623009	Flat washer, 21x32x1

MICROSEM ASSEMBLY

Microsem metering assembly

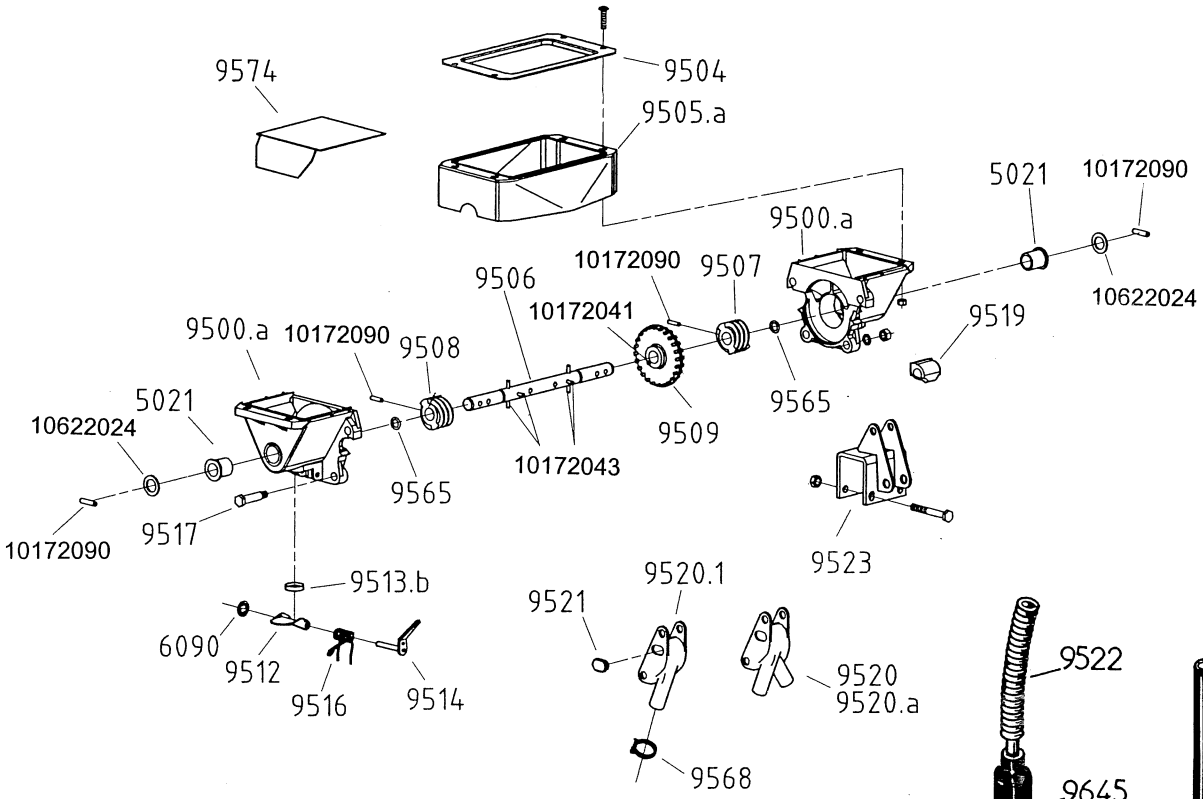

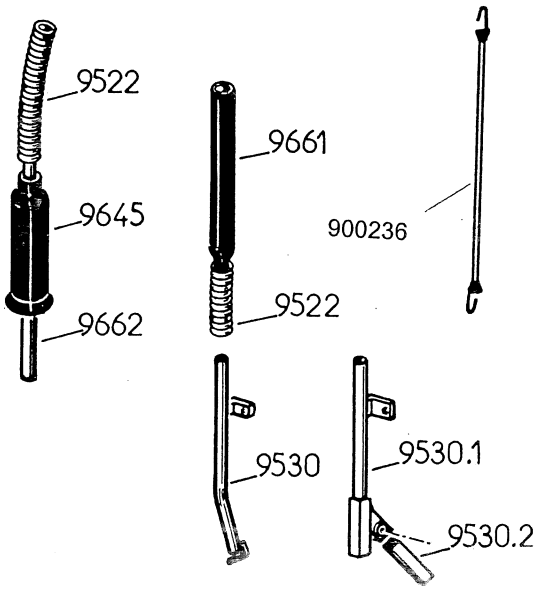

651404	Complete metering assembly, w/two outlets, mounting bracket & no hopper
5021	Self lubricated bushing
6090	Snapring, 6mm
9500.A	Housing(half), metering unit (replaces old 9500 & 9501 left & right sides)
9504	Steel base (to hold down hopper to meter)
9505.A	Rubber skirt
9506	Main spindle(requires 4-4x35 & 2-6x25 roll pins)
9507	Worm gear, left(requires 1-6x25 roll pin)
9508	Worm gear, right(requires 1-6x25 roll pin)
9509	Central metering gear(requires 1-4x25 roll pin)
9512	Trap door (to clean out meter unit)
9513.B	Seal for trap door
9514	Lever for trap door
9516	Spring for trap door
9517	Bolt, to fasten two housings together
9519	Rubber plug
9520	Two outlet chute (towards the front)
9520.A	Two outlet chute (towards the rear)
9520.1	Single outlet
9521	Rubber plug for side of chute
9522	Hose (18mm ID), specify length
9523	Clamp/mounting bracket
9524	Elbow for single outlet
9530	Spreader tube
9530.1	Spreader tube for dual outlet
9530.2	Tube
9565	Rubber O-ring
9568	Hose clamp
9574	Plate for hopper (to convert to one outlet)
9645	Protective sleeve on sliding drop tube assembly
9661	Female half of sliding drop tube assembly
9662	Male half of sliding drop tube assembly
900236	Bungi cord (to keep sliding tubes together)
10622024	Washer, 16 x 26 x 1
10172041	Roll pin, 4 x 25
10172043	Roll pin, 4 x 35
10172090	Roll pin, 6 x 25

MICROSEM ASSEMBLY

Microsem transmission, prior to 2003

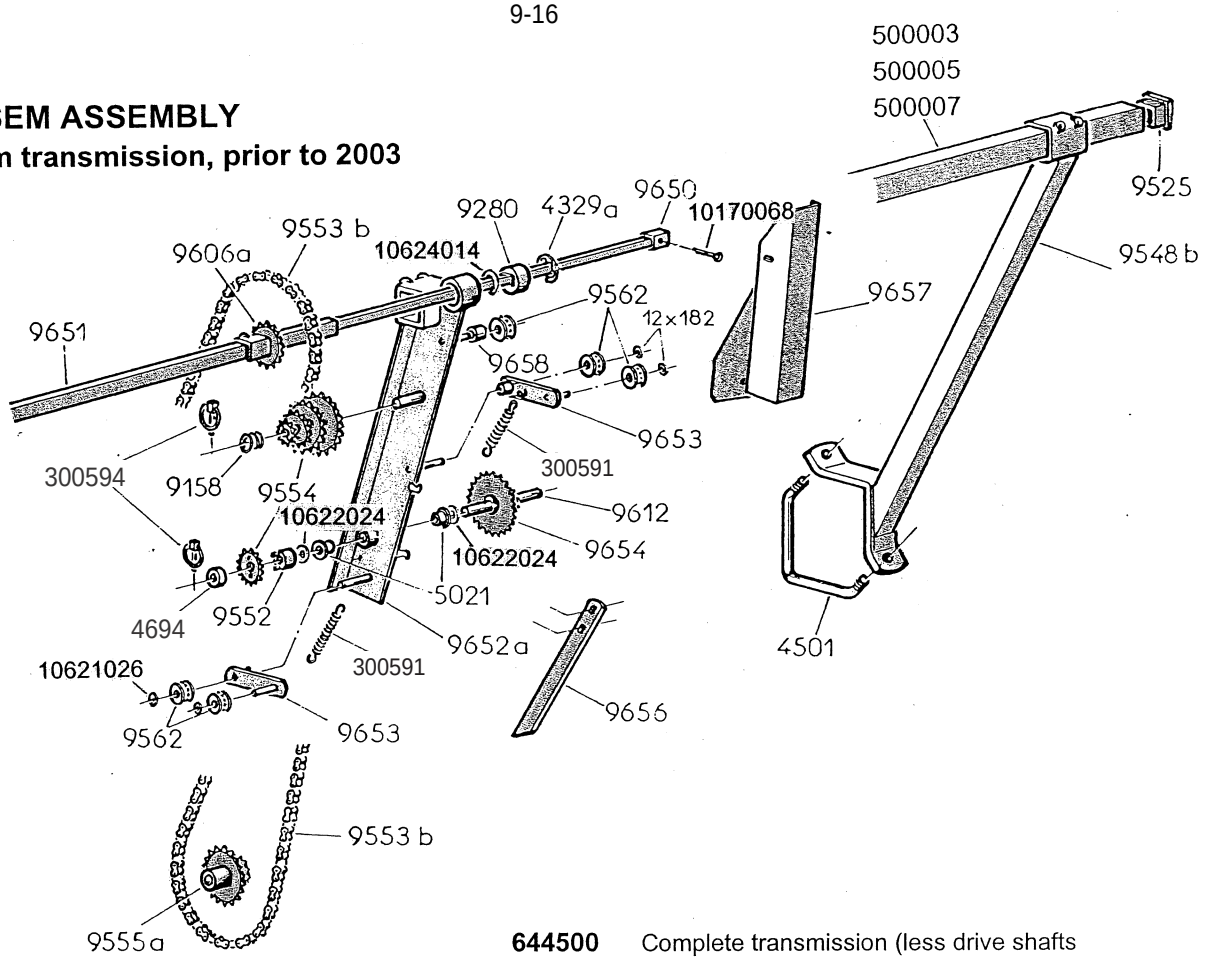

4329.A	Snapring
4501	V-bolt, 16mm
5021	Self lubricated bushing
9158	Spring (holds on extra sprockets)
9280	Bushing, nylon w/square hole
9525	End cap for bar
9548.B	Support bar (for mounting to a 5x5 bar)
500003	Carrier bar, 8' 2" long (1-1/2" square)
500005	Carrier bar, 11' 6" long (1-1/2" square)
500007	Carrier bar, 14' 9" long (1-1/2" square)
9552	Bushing, requires 2-4x25 & 1-6x30 roll pin
9553.B	Chain, 5R (110 links w/conn. link)
9554.3	Sprocket, 12 tooth, 5R (standard)
9554.4	Sprocket, 13 tooth, 5R
9554.5	Sprocket, 14 tooth, 5R
9554.6	Sprocket, 15 tooth, 5R (standard)
9554.7	Sprocket, 16 tooth, 5R
9554.9	Sprocket, 18 tooth, 5R (standard)
9554.11	Sprocket, 20 tooth, 5R
9554.13	Sprocket, 22 tooth, 5R (standard)
9554.16	Sprocket, 25 tooth, 5R (standard)
9554.21	Sprocket, 30 tooth, 5R (standard)
9554.26	Sprocket, 35 tooth, 5R
9555.A	Double sprocket, 12-25 tooth, 5R (hex bore)

644500	Complete transmission (less drive shafts and support bars)
642500	Complete drive shaft (33-1/2" & 47")
642502	Complete drive shaft (both 33-1/2")
300594	Lynch pin, small (6mm)
4694	Bushing (17mmID x 25mmOD, 10mm long)
9562	Chain roller
9606.A	Sprocket, 20 tooth, 5R, top drive shaft (square)
9612	Intermediate shaft (has 3 holes,2 for 6x30 roll pins)
300591	Spring, for chain tightener
9650.085	Drive shaft (inner), 33-1/2" long
9651.085	Drive shaft (outer), 33-1/2" long
9651.12	Drive shaft (outer), 47" long
9652.A	Main support bracket for drive
9653	Chain tightener
9654	Double sprocket, 12-20 tooth, 5R, intermediate shaft
9656	Support arm (for drive frame)
9657	Shield for drive chain
9658	Bushing (12mmID x 19mmOD, 24mm long)
10170068	Cotter pin, 5 x 45
10172041	Roll pin, 4 x 25
10172091	Roll pin, 6 x 30
10621026	Washer, 13 x 18 x 2
10622024	Washer, 16 x 26 x 1
10624014	Washer, 31 x 41 x 1

MICROSEM ASSEMBLY

Microsem transmission,'03 - '05

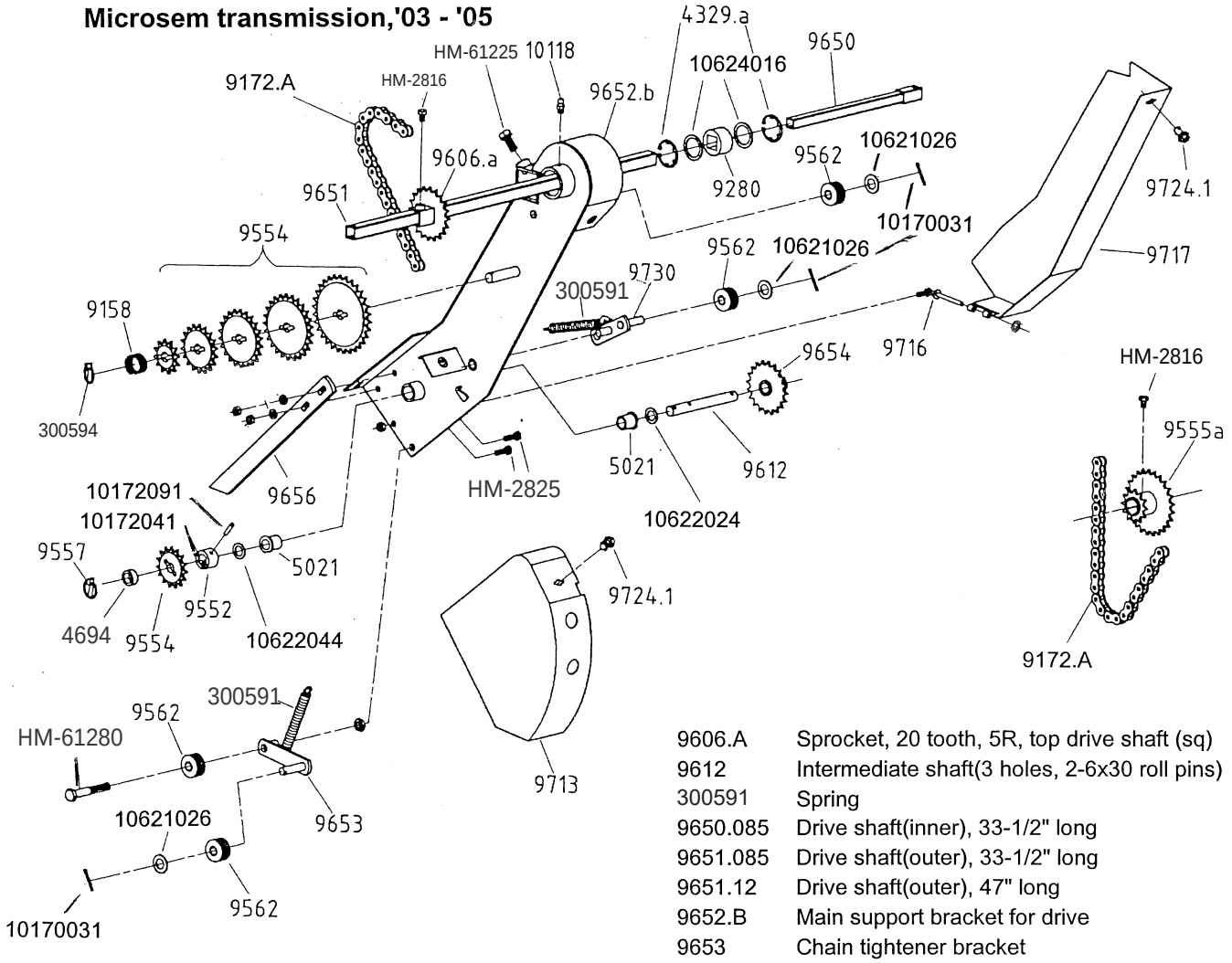

4329.a	Snapring
5021	Self lubricated bushing
9158	Spring (holds on extra sprockets)
9172.A	Chain, 5R(106 links w/conn. link)
9280	Bushing, nylon w/square hole
9552	Bushing, requires 2-4x25 & 1-6x30 roll pin
9554.3	Sprocket, 12 tooth, 5R(standard)
9554.4	Sprocket, 13 tooth, 5R
9554.5	Sprocket, 14 tooth, 5R
9554.6	Sprocket, 15 tooth, 5R(standard)
9554.7	Sprocket, 16 tooth, 5R
9554.9	Sprocket, 18 tooth, 5R(standard)
9554.11	Sprocket, 20 tooth, 5R
9554.13	Sprocket, 22 tooth, 5R(standard)
9554.16	Sprocket, 25 tooth, 5R(standard)
9554.21	Sprocket, 30 tooth, 5R(standard)
9554.26	Sprocket, 35 tooth, 5R
9555.A	Double sprocket, 12-25 tooth, 5R(hex bore)
300594	Lynch pin, small(6mm)
4694	Bushing (17mm ID x 25mm OD x 10mm long)
9562	Chain roller
9606.A	Sprocket, 20 tooth, 5R, top drive shaft (sq)
9612	Intermediate shaft(3 holes, 2-6x30 roll pins)
300591	Spring
9650.085	Drive shaft(inner), 33-1/2" long
9651.085	Drive shaft(outer), 33-1/2" long
9651.12	Drive shaft(outer), 47" long
9652.B	Main support bracket for drive
9653	Chain tightener bracket
9654	Double sprocket, 12-20 tooth, 5R
9656	Support arm (for drive frame)
9658	Bushing (12mmID x 19mmOD x 24mm long)
9713	Shield for drive chain
9716	Pivot pin weldment
9717	Shield for drive chain
9724.1	Shield keeper bolts
9730	Chain tightener bracket
10118	Grease zerk, 6mm, straight
10170031	Cotter pin, 3.5 x 25
10170068	Cotter pin, 5 x 45
10172041	Roll pin, 4 x 25
10172091	Roll pin, 6 x 30
10621026	Washer, 13 x 18 x 2
10622024	Washer, 16.5 x 26 x 1
10622044	Washer, 17 x 30 x 2
10624016	Washer, 31 x 41 x 2
HM-2816	Hex head bolt, 8 x 12
HM-2825	Hex head bolt, 8 x 25
HM-61225	Hex head bolt, 12 x 25
HM-61280	Hex head bolt, 12 x 80

MICROSEM ASSEMBLY

Microsem transmission,'05-

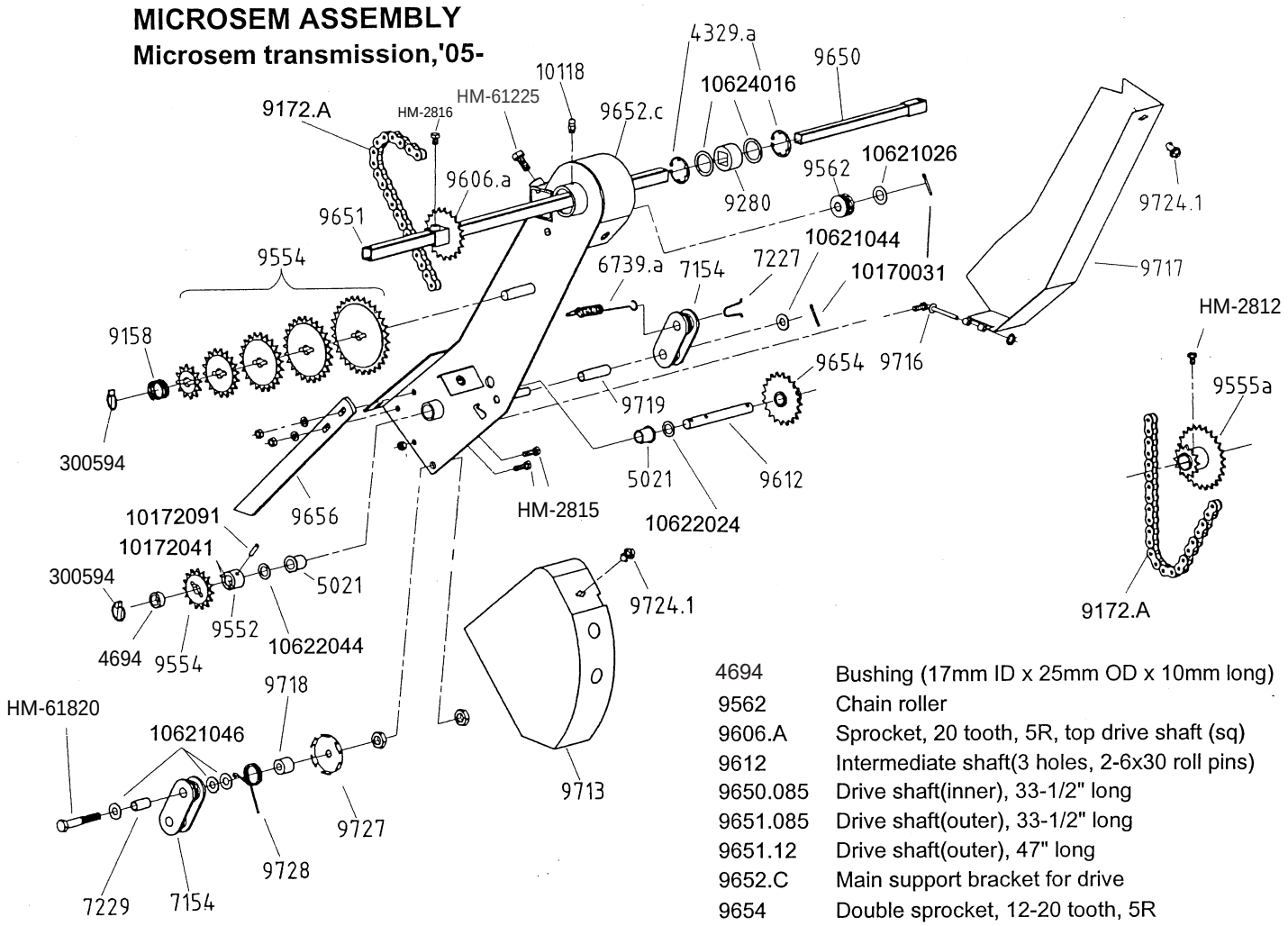

4329.a	Snapring
5021	Self lubricated bushing
6739.A	Spring for idler tension
7154	Plastic chain idler
7227	Spring stop, for 6739.A
7229	Carrier bushing, for idler
9158	Spring (holds on extra sprockets)
9172.A	Chain, 5R(106 links w/conn. link)
9280	Bushing, nylon w/square hole
9552	Bushing, requires 2-4x25 & 1-6x30 roll pin
9554.3	Sprocket, 12 tooth, 5R(standard)
9554.4	Sprocket, 13 tooth, 5R
9554.5	Sprocket, 14 tooth, 5R
9554.6	Sprocket, 15 tooth, 5R(standard)
9554.7	Sprocket, 16 tooth, 5R
9554.9	Sprocket, 18 tooth, 5R(standard)
9554.11	Sprocket, 20 tooth, 5R
9554.13	Sprocket, 22 tooth, 5R(standard)
9554.16	Sprocket, 25 tooth, 5R(standard)
9554.21	Sprocket, 30 tooth, 5R(standard)
9554.26	Sprocket, 35 tooth, 5R
9555.A	Double sprocket, 12-25 tooth, 5R(hex bore)
300594	Lynch pin, small(6mm)

4694	Bushing (17mm ID x 25mm OD x 10mm long)
9562	Chain roller
9606.A	Sprocket, 20 tooth, 5R, top drive shaft (sq)
9612	Intermediate shaft(3 holes, 2-6x30 roll pins)
9650.085	Drive shaft(inner), 33-1/2" long
9651.085	Drive shaft(outer), 33-1/2" long
9651.12	Drive shaft(outer), 47" long
9652.C	Main support bracket for drive
9654	Double sprocket, 12-20 tooth, 5R
9656	Support arm (for drive frame)
9713	Shield for drive chain
9716	Pivot pin weldment
9717	Shield for drive chain
9718	Bushing, for spring to ride on
9719	Carrier bushing, for idler
9724.1	Shield keeper bolts
9727	Disc for spring tension
KD11219	Spring for idler
10118	Grease zerk, 6mm, straight
10170031	Cotter pin, 3.5 x 25
10172041	Roll pin, 4 x 25
10172091	Roll pin, 6 x 30
10621026	Washer, 13 x 18 x 2
10621044	Washer, 13 x 27 x 1
10621046	Washer, 13 x 27 x 2
10622024	Washer, 16.5 x 26 x 1
10622044	Washer, 17 x 30 x 2
10624016	Washer, 31 x 41 x 2
HM-2816	Hex head bolt, 8 x 12
HM-2825	Hex head bolt, 8 x 25
HM-61225	Hex head bolt, 12 x 25
HM-61280	Hex head bolt, 12 x 80

MICROSEM ASSEMBLY
HOPPERS & LIDS

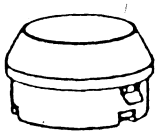

L101

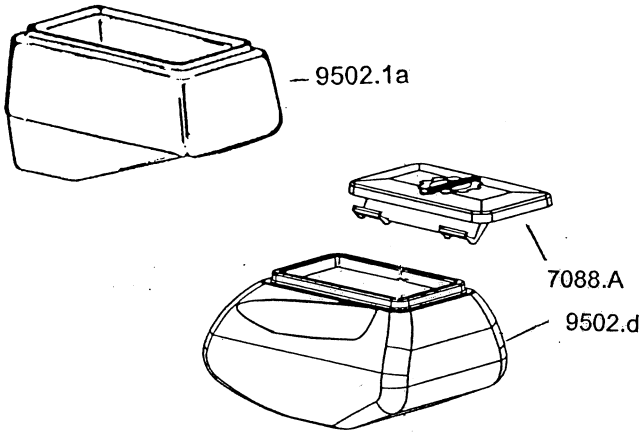

651404	Complete metering assembly, w/two outlets mounting bracket & no hopper
641434	1-standard size hopper w/lid, metering assy. w/2 rear outlets complete
641434.1	1-standard size hopper w/lid, metering assy. w/1 outlet complete
641472	2-standard size hoppers w/lid, metering assy. w/2 rear outlets complete
641491	2-large size hoppers w/lid, metering assy. w/2 rear outlets complete
7088.A	Hopper lid, black, w/spring clip, for hopper 9502.D
9502.1A	Plastic hopper only, 25 liter, offset outlet
9502.D	Plastic hopper only, 25 liter, starting 2004
L101	Lock-n-Load valve only
L101M	Lock-n-Load valve mounted on lid 7088.N
L101MA	Lock-n-Load valve mounted on lid 7088.A

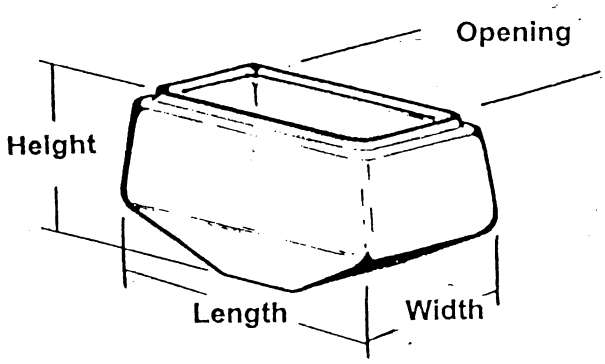

Dimensions of hoppers & lids

9502.1A	10" wide x 16-1/2" long 9" tall with a 5" x 15" opening
9502.2	12-1/2" wide x 17" long 12" tall with an 8" x 15" opening
9502.D	11" wide x 17-1/2" long 9" tall with a 5" x 10-1/2" opening
7088.N	7" wide x 16-3/4" long
7088.A	7" wide x 12-1/2" long
7104.CO	10" wide x 17" long

#653103

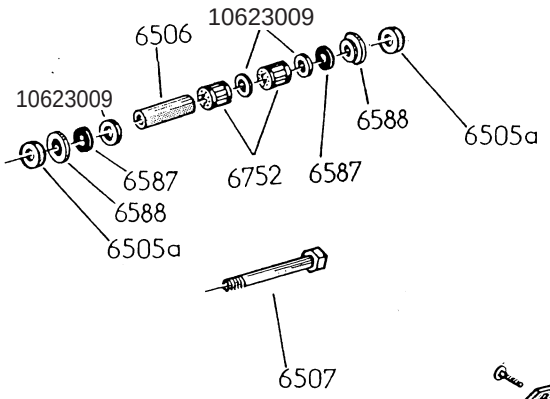

#650326

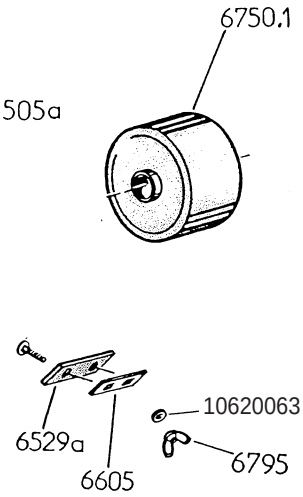

#642911
Version A SS press wheel
210 x 100 (4" wide x 8-1/4" tall)
complete (all items below)

#650326
Version A SS press wheel only
210 x 100 (4" wide x 8-1/4" tall)

#653103
bearing and shaft assembly

#651043
scraper assy. only

#651043

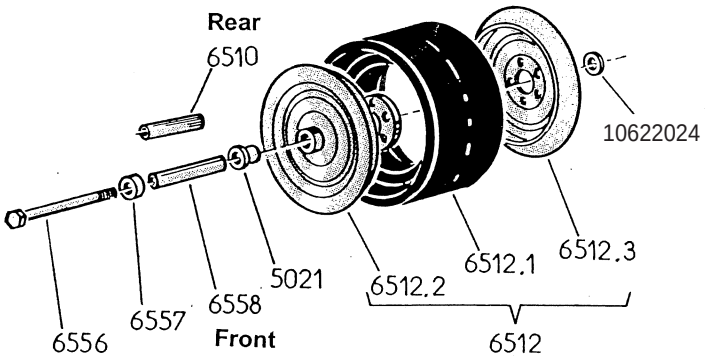

#100554
Version A & C rear press wheel
250 x 145 (5-3/4" wide x 9-3/4" tall)
includes axle bolt & spacer

#650365 (wheel only)
#653002 (axle bolt & spacer only)

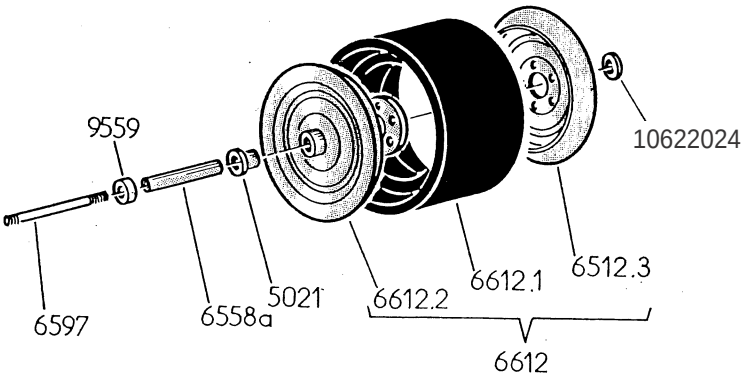

#642463
Version D rear press wheel
250 x 170 (6-5/8" wide x 9-3/4" tall)
includes axle bolt & spacer

#6612 (wheel only)
#653007 (axle bolt, & spacer only)

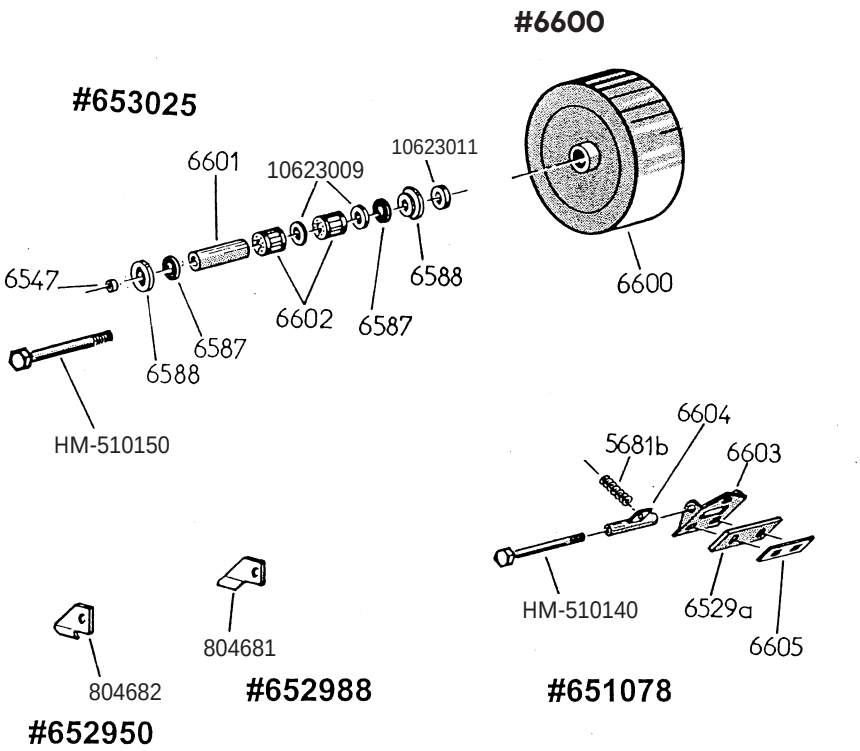

#642925
Version A SS front press wheel assy.
250 x 105 (4-1/8" wide x 10" tall)
complete (all items below)

#6600
Version A SS press wheel only
250 x 105 (4-1/8" wide x 10" tall)
#653025
bearing and shaft assembly
#651078
scraper assy. only
#652950(6610.G)
#652988(6610.D)

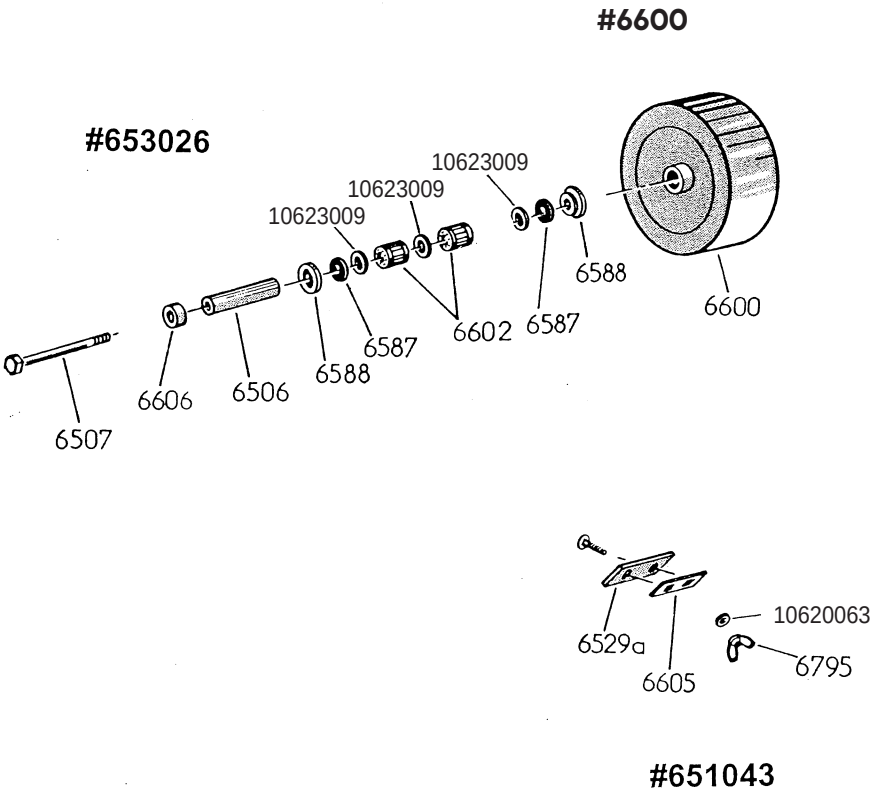

#642910
Version A SS rear press wheel assy.
250 x 105 (4-1/8" wide x 10" tall)
complete (all items below)

#6600
Version A SS press wheel only
250 x 105 (4-1/8" wide x 10" tall)
#653026
bearing and shaft assembly
#651043
scraper only

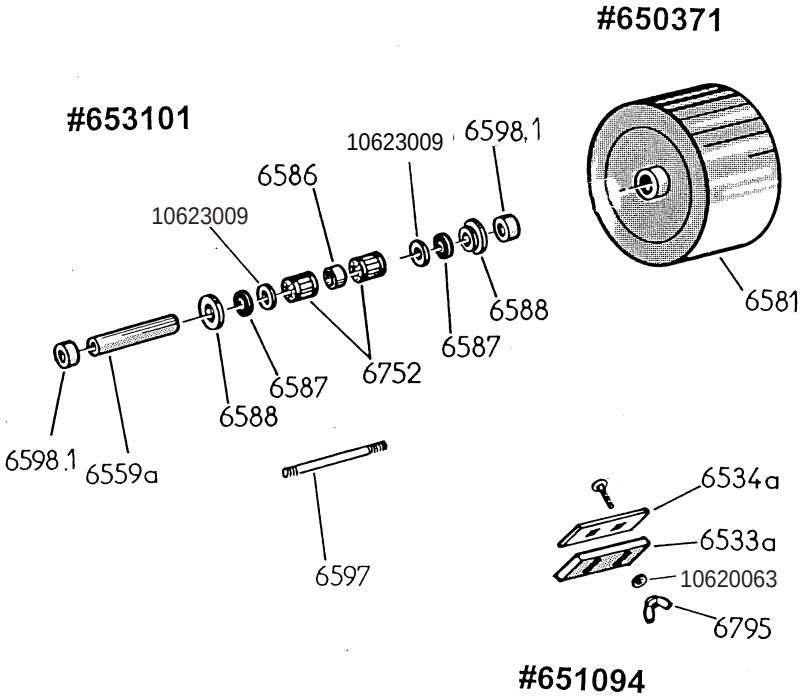

#100545
Version D SS front press wheel assy.
250 x 140 (5-1/2" wide x 9-3/4" tall)
complete (all items below)

#650371
Version D SS press wheel only
250 x 140 (5-1/2" wide x 9-3/4" tall)
no hardware or bearings

#653101
bearing and shaft assembly

#651094
scraper blade assembly

#652990
scraper mounting bracket assy.

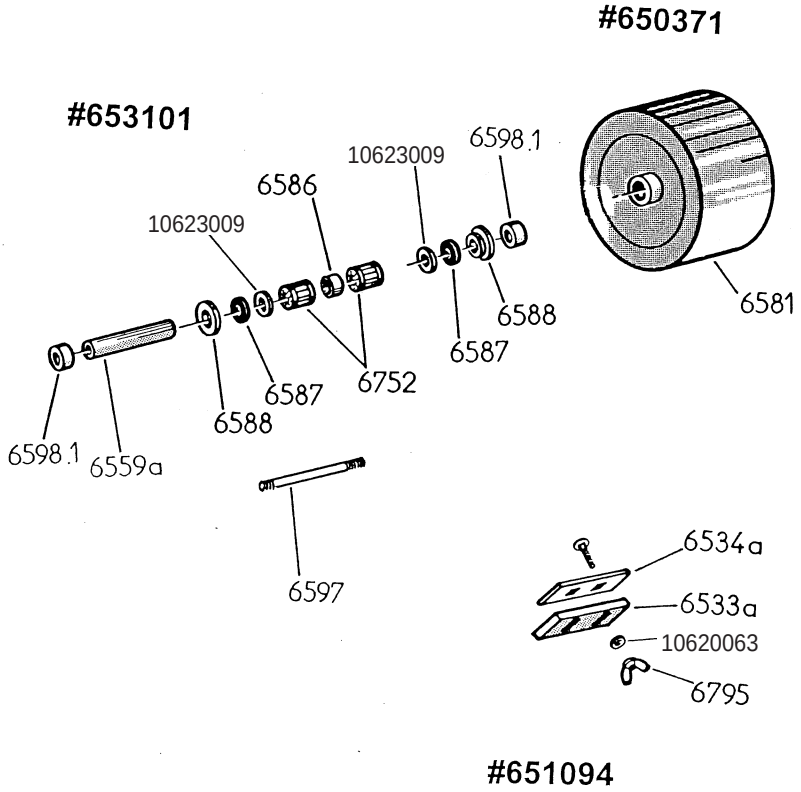

#642466
Version D SS rear press wheel assy.
250 x 140 (5-1/2" wide x 9-3/4" tall)
complete (all items below)

#650371
Version D SS press wheel only
250 x 140 (5-1/2" wide x 9-3/4" tall)
no hardware or bearings

#653101
bearing and shaft assembly

#651094
scraper blade assembly

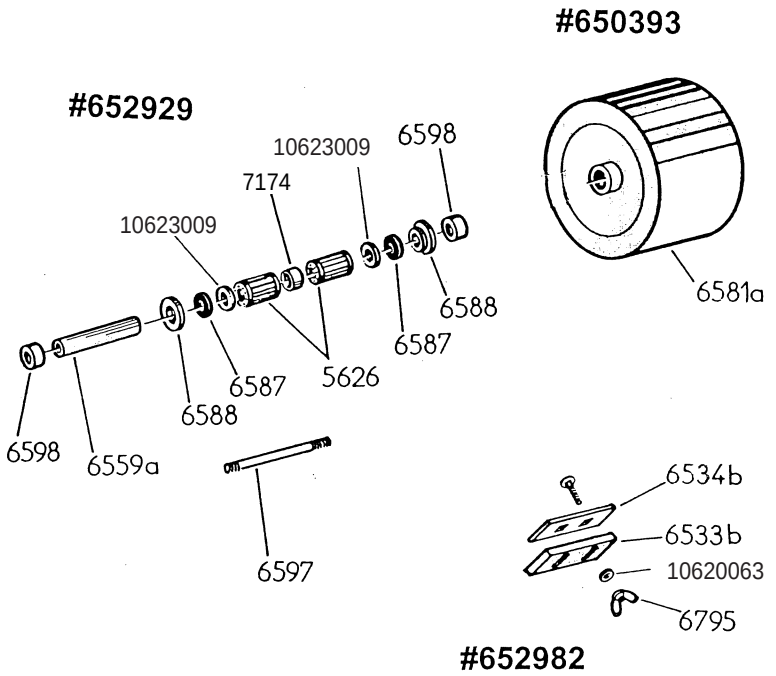

#100546
Version D SS front press wheel assy.
250 x 170 (6-5/8" wide x 9-3/4" tall)
complete (all items below)

#650393
Version D SS press wheel only
250 x 170 (6-5/8" wide x 9-3/4" tall)
no hardware or bearings

#652929
bearing and shaft assembly

#652982
scraper blade assembly

#652990
scraper mounting bracket assy.

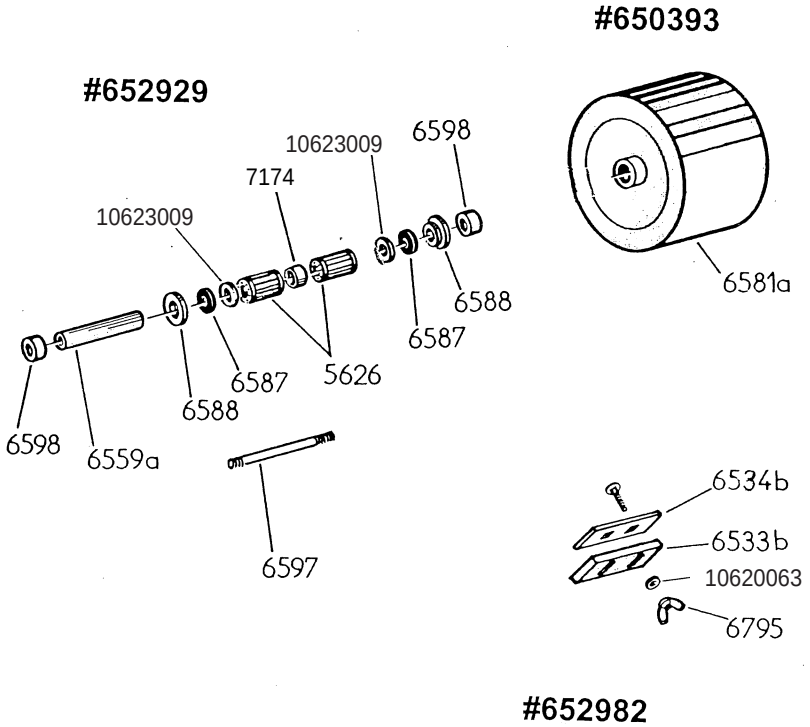

#100549
Version D SS rear press wheel assy.
250 x 170 (6-5/8" wide x 9-3/4" tall)
complete (all items below)

#650393
Version D SS press wheel only
250 x 170 (6-5/8" wide x 9-3/4" tall)
no hardware or bearings

#652929
bearing and shaft assembly

#652982
scraper blade assembly

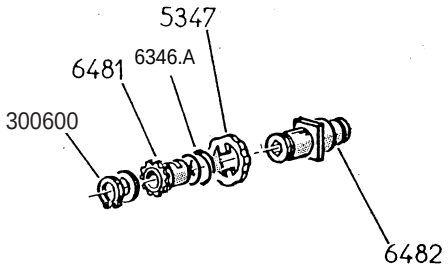

651611
disengaging clutch assembly
Version A - C

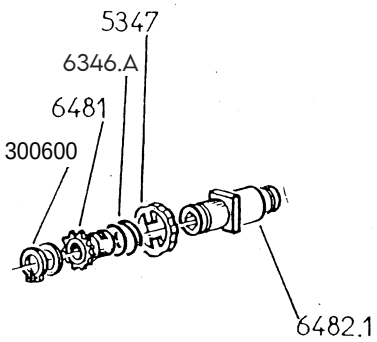

651056
disengaging clutch assembly
Version D

MS SEED DISC RECOMMENDATIONS

CROP		HOLE SIZE	SEED DISC
Asparagus		2mm	M6020, M12020
Beet, Red		2mm	M6020
Broccoli		1.2mm	M3612, M7212
Cabbage		1.2mm	M3612, M7212
Carrot	Raw	.7mm	M6007, M12007
	Pelleted	1.2mm	M6012, M12012
Cauliflower		1.2mm	M3612, M7212
Chives		.7mm	M6007, M12007
Cucumber		1.8 or 2mm	M1818, M1820
Endive		.6mm	M6006
Fennel		1.2mm	M3612, M7212
Leek		1mm(.9 - 1.2mm)	M3610, M7210
Lettuce	Pelleted	2.2mm	M6022, M7222
	Film coated	.7mm	M6006, M6007
	Raw	.6mm	M6006
Melon		1.8 or 2mm	M1818, M1820
Onion	Pelleted	2.2mm	M3622, M7222
	Raw	1.2mm	M3612, M7212
Parsley		.7mm	M6007, M18007
Pepper		1.2mm	M3612, M7212
Poppy		.8mm	M7208
Radish		1.2 or 1.8mm	M7212, M7218
Spinach		1.8mm	M6018, M7218
Tomato		1mm	M7210
Turnip		.9mm	M7209

SEED DISC IDENTIFICATION

The first 2 or 3 numbers indicate the number of holes in the disc. The last two numbers indicate the size of the holes, in mm.

EXAMPLE:
M3612 - 36 holes; 1.2mm dia. holes
M12008 - 120 holes; .8mm dia. holes
2M7222 - 2 rows of 72 holes; with 2.2mm dia. holes

To order a seed disc complete with agitator 6452.A, use MC instead of M.
EXAMPLE:
M3612 - is disc only
MC3612 - is disc with agitator mounted to it

Discs available

Single line discs	Double line discs	
M1812	2M3612	2M7222
M1818	2M3622	2M12007
M1820	2M6012	2M12010
M3610	2M6018	2M12012
M3612	2M7207	2M12015
M3618	2M7208	2M12018
M3622	2M7210	2M12020
M6006	2M7212	2M18007
M6007	2M7218	2M18012
M6012		
M6018		
M6020		
M6022		
M7208		
M7209		
M7210		
M7212		
M7218		
M7222		
M12007		
M12008		
M12010		
M12012		
M12018		
M12020		
M12022		
M18007		
M18010		
M18012		

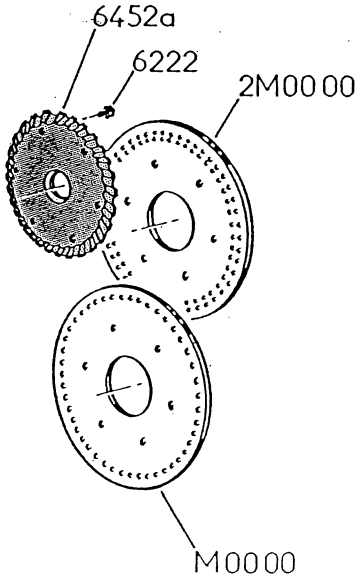

TWIN ROW
OFFSET ASSEMBLY FOR 9"

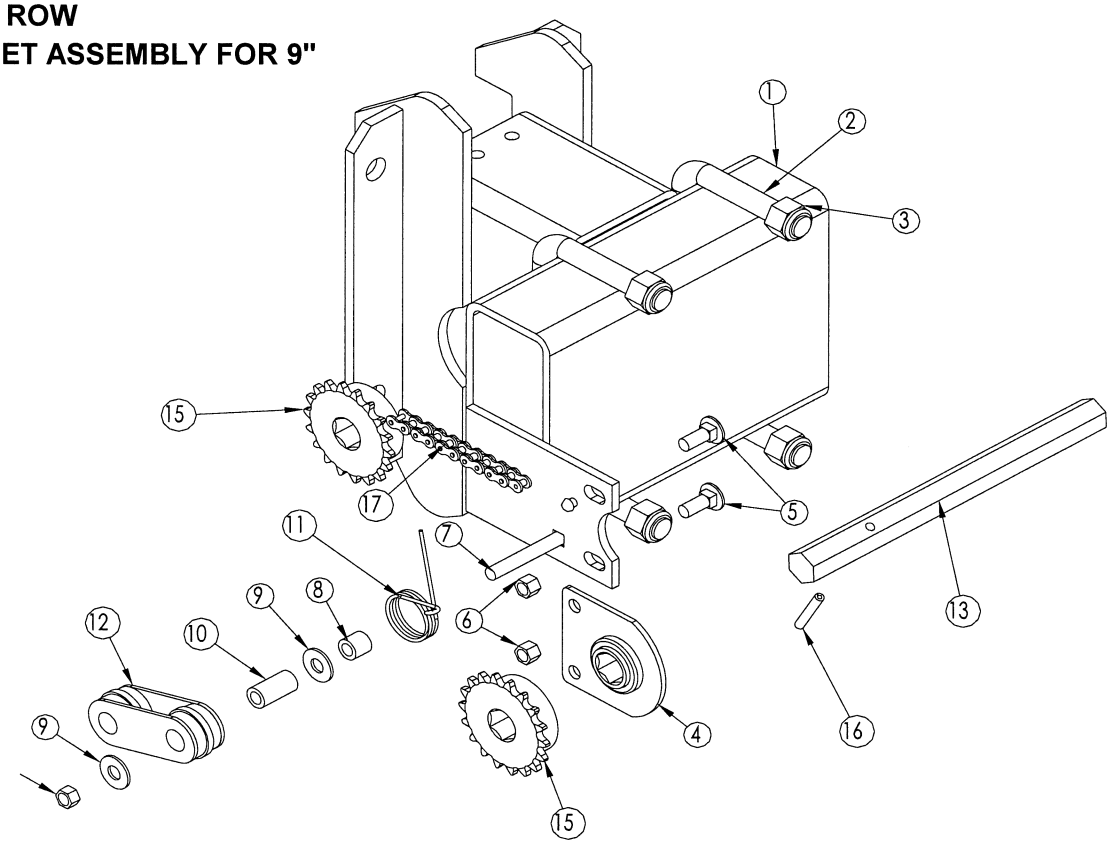

ITEM	PART No.	DESCRIPTION
1	100504	Twin-row offset bracket
2	900164	U Bolt 7"x 3"x 5/8"-11
3	N-5101	5/8"-11 Nylock nut
4	KA2180	Bearing hanger 7/8" hex
5	CB-2210	Carriage bolt 3/8"-16x 1"
6	N-2101	Nylock nut 3/8"-16
7	CB-2231	Carriage bolt 3/8"-16x 2.5"
8	KD2971	Tube marker 5/8" OD x 3/8" ID
9	W-2210	3/8" Flat washer
10	KD1026	Sleeve bushing 1 3/16"
11	KD11219	Spring, US Insect idler
12	KD11962	Idler
13	E7502.1	Hex shaft for 7.5" offset bracket
14	N-2300	Rev lock nut 3/8"- 16
15	G40B18	Sprocket 40-18
16	F64251	Spring pin 1/4"x 1 1/2"
17	900184.B	Chain #40 55 PITCHES + MASTER

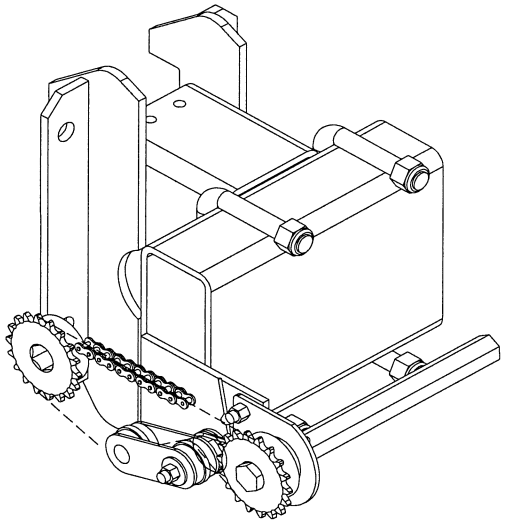

TWIN ROW OFFSET ASSEMBLY FOR 8"

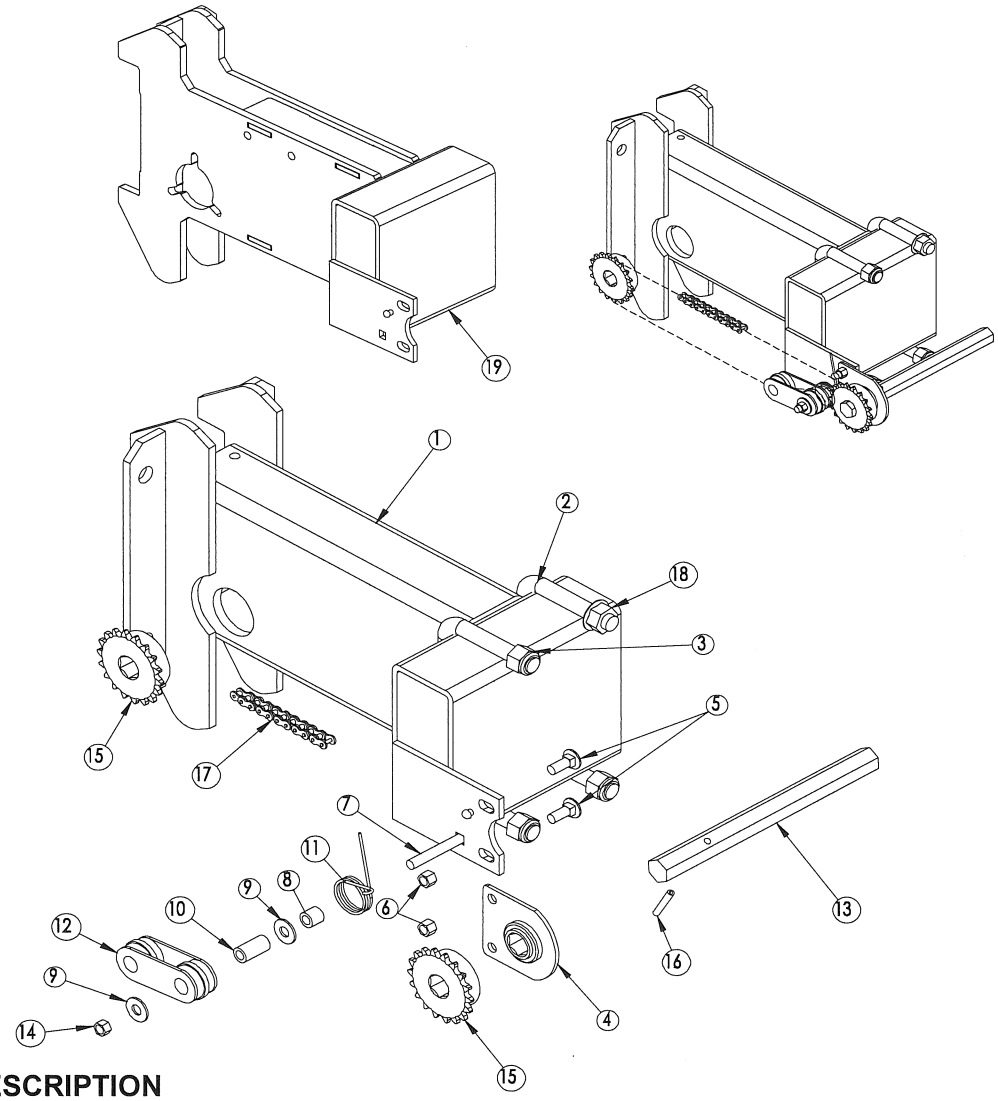

ITEM	PART No.	DESCRIPTION
1	E7501.2	Twin-row offset bracket, standard
2	900164	U Bolt 7"x 3"x 5/8"-11
3	N-5101	5/8"-11 Nylock nut
4	KA2180	Bearing hanger, 7/8" hex bore
5	CB-2210	Carriage bolt 3/8"-16x 1"
6	N-2101	Nylock nut 3/8"-16
7	CB-2231	Carriage bolt 3/8"-16x 2.5"
8	KD2971-10	Sleeve bushing, 3/8 ID x 5/8 OD x 9/16" long
9	W-2210	3/8" Flat washer
10	KD1026	Sleeve bushing, 3/8 ID x 5/8 OD x 1-3/16" long
11	KD11219	Spring, for idler
12	KD11962	Plastic idler block
13	E7502.1	Hex shaft w/1/4" hole, 10" long
14	N-2300	Rev lock nut 3/8"- 16
15	G40B18	Sprocket 18T, # 40, hex bore
16	F64251	Spring pin 1/4"x 1-1/2"
17	900327	Chain #40, 90 links (w/conn link)
18	N-5401	Flange nut 5/8"-11
19	E7501.3	Twin-row offset bracket RH(shown)
	E7501.4	Twin-row offset bracket LH(not shown)

TWIN ROW
V PRESS WHEEL CLOSING ASSEMBLY FOR 8"

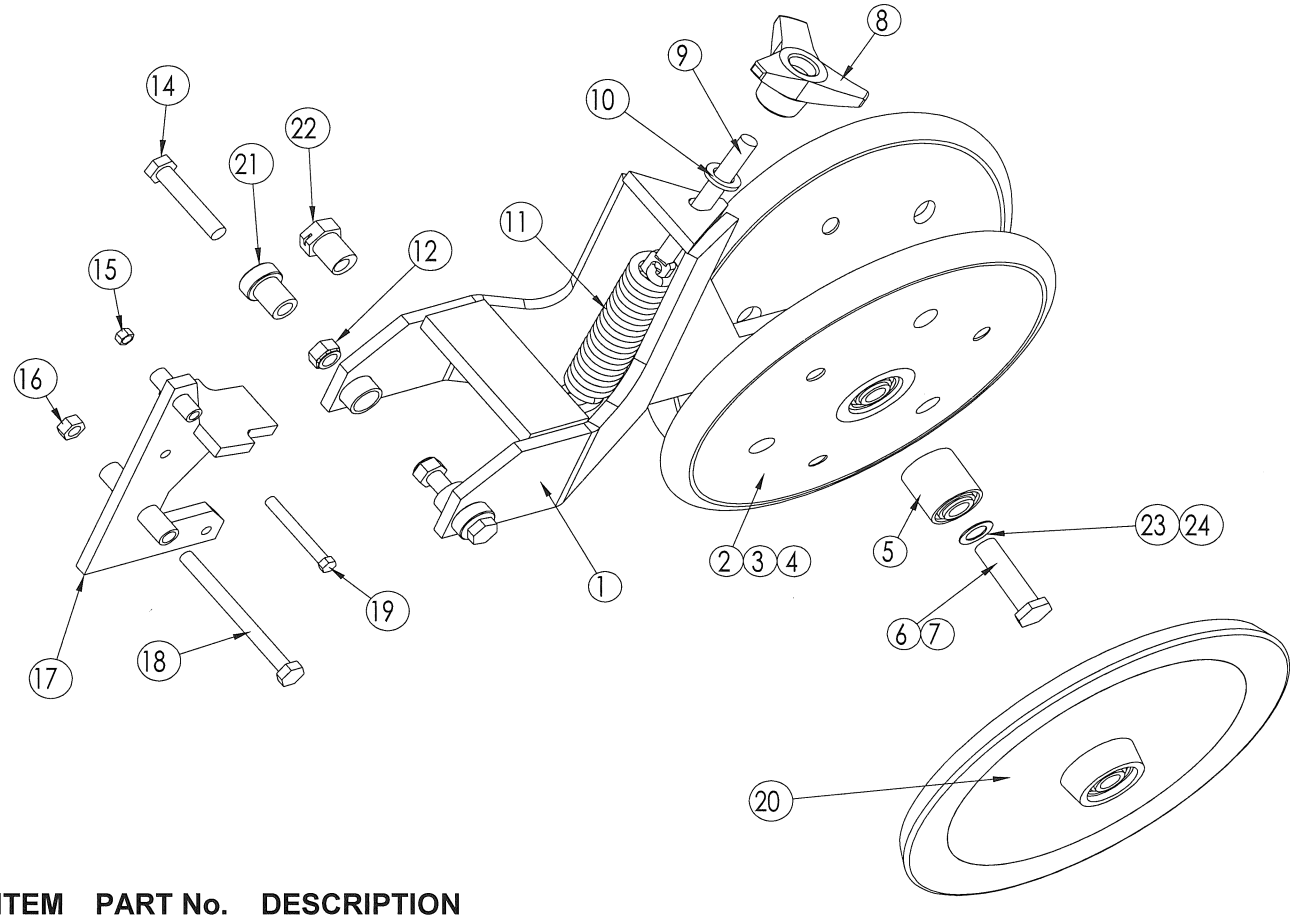

ITEM	PART No.	DESCRIPTION
1	E7528-797	Wheel mounting bracket
2	7074.N	Closing wheel complete
3	7074.A40	One half of closing wheel rim, nylon
4	7074.2	Rubber tire, closing wheel, 1 X 12"
5	900125	Bearing 40mm (DAC 1640442RSLCS)
6	7258.GSS	Hex head bolt (thin head) LH, 16 X 60mm
7	7258.DSS	Hex head bolt (thin head) RH, 16 X 60mm
8	7082	Hand wheel, 12mm
9	300605	Threaded adjustment rod, 12x 130mm
10	W-4410	Flat washer, 1/2" SAE
11	7075	Spring
12	NM-31205	Nylon locknut, 12mm
14	HM-61265	Hex head bolt, 12 X 65mm
15	NM-1812	Locknut, 8mm
16	NM-21015	Locknut, 10mm
17	E7524	Spring plate
18	HM-510130	Hex head bolt, 10 X 130mm
19	HM-2865	Hex head bolt, 8 X 65mm
20	KA6597	Cast iron closing wheel (W/900125 bearing)
21	E9051.1	Eccentric bushing
22	800474	Straight bushing
23	10622024	Washer spacer, 16.5x26x1mm
24	10622026	Washer spacer, 16.5x26x2mm

TWIN ROW
7.5" FLAT PRESS WHEEL CLOSING ASSEMBLY

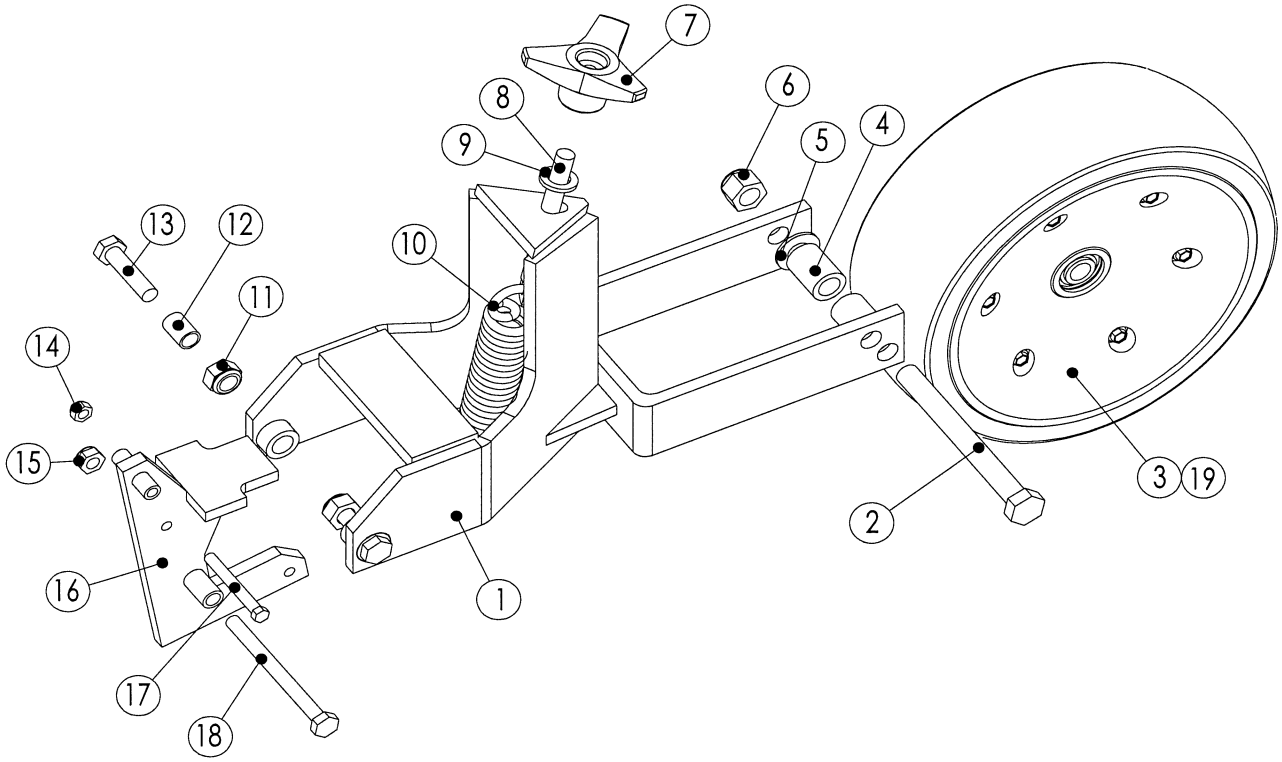

ITEM	PART No.	DESCRIPTION
1	E7530	Wheel mounting bracket
2	F15325	Hex bolt 5/8-11 x 6"
3	11540.AM	Flat closing wheel, 4" x 12" crowned
	11540.AMC	Flat closing wheel, 4" x 12" concave
4	900235	Bushing - 32mm
5	W-5410	Flat washer - 5/8" SAE
6	N-5101	Nylock nut 5/8-11
7	7082	Knob 12MM
8	300605	Tension rod - 12 x 130mm
9	W-4410	Flat washer - 1/2" SAE
10	7075	Spring
11	NM-31205	Lock nut M12
12	E7522.1	Bushing 23mm
13	HM-61250	Hex bolt M12 x 50mm
14	NM-1812	Lock nut M8
15	NM-21015	Lock nut M10
16	E7524	Spring plate
17	HM-2865	Hex bolt M8 x 65mm
18	HM-510120	Hex bolt M10 x 120mm
19	900125	Wheel bearing 40mm (DAC1640442RSLCS)